ORDER NO. CPD0611206C1

Service Manual

Notebook Computer

Model No. **CF-19CHBAXBM**

TOUGHBOOK

This is the Service Manual for the following areas.
M …for U.S.A. and Canada

Model No. CF-19CHBAX *1* *2*

1: Operation System
B: Microsoft® Windows® XP Professional
2: Area
M: Refer to above area table

⚠ WARNING

This service information is designed for experienced repair technicians only and is not designed for use by the general public.
It does not contain warnings or cautions to advise non-technical individuals of potential dangers in attempting to service a product.
Products powered by electricity should be serviced or repaired only by experienced professional technicians. Any attempt to service or repair the product or products dealt with in this service information by anyone else could result in serious injury or death.

Panasonic®

© 2006 Matsushita Electric Industrial Co., Ltd. All rights reserved.
Unauthorized copying and distribution is a violation of law.

Downloaded from www.Manualslib.com manuals search engine

WARNINGS

For U.K.

This apparatus must be earthed for your safety.

To ensure safe operation the three-pin plug must be inserted only into a standard three-pin power point which is effectively earthed through the normal household wiring.

Extension cords used with the equipment must be three-core and be correctly wired to provide connection to earth. Wrongly wired extension cords are a major cause of fatalities.

The fact that the equipment operates satisfactorily does not imply that the power point is earthed and that the installation is completely safe.

For your safety, if you have any doubt about the effective earthing of the power point, consult a qualified electrician.

FOR YOUR SAFETY PLEASE READ THE FOLLOWING TEXT CAREFULLY

This appliance is supplied with a moulded three pin mains plug for your safety and convenience.

A 3 amp fuse is fitted in this plug.

Should the fuse need to be replaced please ensure that the replacement fuse has a rating of 3 amps and that it is approved by ASTA or BSI to BS 1362.

Check for the ASTA mark or the BSI mark on the body of the fuse.

If the plug contains a removable fuse cover you must ensure that it is refitted when the fuse is replaced.

If you lose the fuse cover the plug must not be used until a replacement cover is obtained.

A replacement fuse cover can be purchased from your local Panasonic Dealer.

IF THE FITTED MOULDED PLUG IS UNSUITABLE FOR THE SOCKET OUTLET IN YOUR HOME THEN THE FUSE SHOULD BE REMOVED AND THE PLUG CUT OFF AND DISPOSED OF SAFELY.

THERE IS A DANGER OF SEVERE ELECTRICAL SHOCK IF THE CUT OFF PLUG IS INSERTED INTO ANY 13 AMP SOCKET.

If a new plug is to be fitted please observe the wiring code as shown below.

If in any doubt please consult a qualified electrician.

Warning: THIS APPLIANCE MUST BE EARTHED.

Important

The wires in this mains lead are coloured in accordance with the following code:

Green-and-yellow:	Earth
Blue:	Neutral
Brown:	Live

As the colours of the wires in the mains lead of this apparatus may not correspond with the coloured markings identifying the terminals in your plug, proceed as follows:

The wire which is coloured GREEN-and-YELLOW must be connected to the terminal in the plug which is marked by the letter E or by the safety earth symbol coloured GREEN or GREEN-and-YELLOW.

The wire which is coloured Blue must be connected to the terminal which is marked with the letter N or coloured BLACK.

The wire which is coloured Brown must be connected to the terminal which is marked with the letter L or coloured RED.

The mains plug on this equipment must be used to disconnect the mains power.

Please ensure that a socket outlet is available near the equipment and shall be easily accessible.

■ How to replace the fuse

Open the fuse compartment with a screwdriver and replace the fuse.

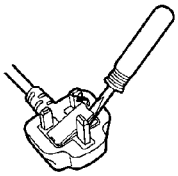

Warnings

- This equipment is not designed for connection to an IT power system.
  (An IT system is a system having no direct connections between live parts and Earth; the exposed-conducive-parts of the electrical installation are earthed.
  An IT system is not permitted where the computer is directly connected to public supply systems in the U.K.)
- Disconnect the mains plug from the supply socket when the computer is not in use.

This equipment is produced to BS800/1983.

Downloaded from www.Manualslib.com manuals search engine

Safety precautions

1. Before servicing, unplug the power cord to prevent an electric shock.
2. When replacing parts, use only manufacture's recommended components for safety.
3. Check the condition of the power cord. Replace if wear or damage is evident.
4. After servicing, be sure to restore the lead dress, insulation barriers, insulation papers, shields, etc.

Important Safety Instructions

When using your telephone equipment, basic safety precautions should always be followed to reduce the risk of fire, electric shock and injury to persons, including the following:

1. Do not use this product near water, for example, near a bath tub, wash bowl, kitchen sink or laundry tub, in a wet basement or near a swimming pool.
2. Avoid using a telephone (other than a cordless type) during an electrical storm. There may be a remote risk of electric shock from lightning.
3. Do not use the telephone to report a gas leak in the vicinity of the leak.
4. Use only the power cord and batteries indicated in this manual. Do not dispose of batteries in a fire. They may explode. Check with local codes for possible special disposal instructions.

SAVE THESE INSTRUCTIONS

Lithium Battery

Lithium Battery!

This computer contains a lithium battery to enable the date, time, and other data to be stored. The battery should only be exchanged by authorized service personnel.

Warning! A risk of explosion from incorrect installation or misapplication may possibly occur.

LITHIUM BATTERY ⚠

• **CAUTION**

Danger of explosion if battery is incorrectly replaced.
Replace only with the same or equivalent type recommended by the equipment manufacture.
Discard used batteries according to the manufacturer's instructions.

LITHIUMBATTERIES ⚠

Vorsicht!

Explosionsgefahr bei unsachgemäßem Austausch der Batterie. Ersatz nur durch denselben order einen vom Hersteller empfohlenen ähnlichen Typ. Entsorgung gebrauchter Batterien nach Angaben des Herstellers.

PILE AU LITHIUM ⚠

ATTENTION: IL Y A DANGER D'EXPLOSION S' IL Y A REMPLACEMENT INCORRECT DE LA PILE. REMPLACER UNIQUEMENT AVEC UNE PILE DU MÈME TYPE OU D'UN TYPE RECOMMANDÉ PAR LE CONSTRUCTEUR. METTRE AU RÉBUT LES PILES USAGÉES CONFORMÉMENT AUX INSTRUCTIONS DU FABRICANT.

For U.S.A. / CANADA

A lithium ion battery that is recyclable powers the product you have purchased. Please call 1-800-8-BATTERY for information on how to recycle this battery.

L'appareil que vous vous êtes procuré est alimenté par une batterie au lithium-ion. Pour des renseignements sur le recyclage de la batterie, veuillez composer le 1-800-8-BATTERY.

Downloaded from www.Manualslib.com manuals search engine

Precautions (Battery Pack)

- Care should be exercised with regard to the following in order to avoid the possibility of overheating, fire or damage.

Avoid Heat
Do not throw the battery pack into a fire or expose it to excessive heat.

Keep Articles Away
Do not place the battery pack together with articles such as necklaces or hairpins when carrying or storing.

Do Not Disassemble
Do not insert sharp objects into the battery pack, expose it to bumps or shocks, deform, disassemble, or modify it.

Do Not Short
Do not short the positive (+) and negative (-) contacts.

Avoid Extreme Heat, Cold and Direct Sunlight
Do not charge, use or leave the battery pack for extended periods where it will be exposed to direct sunlight, in a hot place (in an automobile on a sunny day, for example), or in a cold place.

Do Not Use With Any Other Computer
The battery pack is rechargeable and was intended for the specified computer or charger. Do not use it with a computer other than the one for which it was designed.

Do Not Put into a Microwave
Do not put the battery pack into a microwave oven or a pressurized chamber.

Discontinue Use
Should the battery emit an abnormal odor, become hot to the touch, become discolored, change shape, or become in any way different from normal, remove it from the computer or charger and discontinue use.

- Do not touch the terminals on the battery pack. The battery pack may no longer function properly if the contacts are dirty or damaged.
- Do not expose the battery pack to water, or allow it to become wet.
- If the battery pack will not be used for a long period of time (a month or more), charge or discharge (use) the battery pack until the remaining battery level becomes 30% to 40% and store it in a cool, dry place.
- This computer prevents overcharging of the battery by recharging only when the remaining power is less than approx. 95% of capacity.
- The battery pack is not charged when the computer is first purchased. Be sure to charge it before using it for the first time. When the AC adaptor is connected to the computer, charging begins automatically.
- Should the battery leak and the fluid get into your eyes, do not rub your eyes. Immediately flush your eyes with clear water and see a doctor for medical treatment as soon as possible.

NOTE

- The battery pack may become warm during recharging or normal use. This is completely normal.
- Recharging will not commence outside of the allowable temperature range (0 °C to 50 °C {32°F to 122 °F}).(☞ Reference Manual "Battery Power") Once the allowable range requirement is satisfied, charging begins automatically. Note that the recharging time varies based on the usage conditions. (Recharging takes longer than usual when the temperature is 10 °C {50 °F} or less.)
- If the temperature is low, the operating time is shortened. Only use the computer within the allowable temperature range.
- The battery pack is a consumable item. If the amount of time the computer can be run off a particular battery pack becomes dramatically shorter and repeated rechargings do not restore its performance, the battery pack should be replaced with a new one.
- When transporting spare batteries inside a package, briefcase, etc., it is recommended that it be placed in a plastic bag so that its contacts are protected.
- Always power off the computer when it is not in use. Leaving the computer on when the AC adaptor is not connected will exhaust the remaining battery capacity.

Downloaded from www.Manualslib.com manuals search engine

CONTENTS

1. Specifications ---------- 1-1
2. Names and Functions of Parts ---------- 2-1
3. Block Diagram ---------- 3-1
4. Diagnosis Procedure ---------- 4-1
5. Power-On Self Test (Boot Check) ---------- 5-1
6. List of Error Codes <Only when the port replicator is connected> ---------- 6-1
7. Self Diagnosis Test ---------- 7-1
8. Wiring Connection Diagram ---------- 8-1
9. Disassembly/Reassembly ---------- 9-1
10. Exploded View ---------- 10-1
11. Replacement Parts List ---------- 11-1

Downloaded from www.Manualslib.com manuals search engine

1 Specifications

Main Specifications

Model No.		CF-19CHBAXBM	CF-19CDBAXVM
CPU		Intel® Core™ Duo Processor U2400 (1.06 GHz, 2 MB[*1] L2 cache, 533 MHz FSB)	
Chipset		Intel® 945GM	
Memory[*1*2]		512 MB (4096 MB Max.)	
Video Memory[*1*3]		UMA (128 MB Max.)	
Hard Disk Drive[*4]		80 GB	
Display Method		10.4 XGA type (TFT)	
Internal LCD[*5]		65,536/16,777,216 colors (800 × 600 dots/1024 × 768 dots)	
External Display[*6]		65,536/16,777,216 colors (800 × 600 dots/1024 × 768 dots/1280 × 768 dots/1280 × 1024 dots)	
Wireless LAN[*7]		Intel PRO / Wirelee 3945 ABG (802.11a + b + g)	
Bluetooth™ [*8]		2.0 + EDR	
LAN		IEEE 802.3 10Base-T, IEEE 802.3u 100Base-TX	
Modem		Data: 56 kbps (V.92) FAX: 14.4 kbps	
Sound		WAVE and MIDI playback, Intel® High Definition Audio subsystem support, Monaural speaker	
Security Chip		TPM (TCG V1.2 compliant)[*9]	
Card Slot	PC Card	Type I or Type II x 1 (3.3 V: 400 mA, 5 V: 400 mA)	
	ExpressCard	ExpressCard/34[*10] or ExpressCard/54 x 1	
	SD Memory Card[*11]	x 1, Data transfer rate = 8 MB per second[*12]	
RAM Module Slot		200-pin, 1.8 V, SO-DIMM, DDR2 SDRAM, PC2-4200 Compliant	
Interface		USB port (4-pin, USB 2.0) x 2, Serial Port (Dsub 9-pin male), Modem port (RJ-11), LAN port (RJ-45), External display port (Mini Dsub 15-pin female), Expansion Bus Connector (Dedicated 100-pin female), External Antenna Connector (Dedicated 50 coaxial connector) x 2, IEEE 1394a Interface Connector (4-pin x 1), Microphone Jack (Miniature jack, 3.5 DIA, Stereo), Headphone Jack (Miniature jack, 3.5 DIA, Impedance 32 , Output Power 4 mW × 2)	
Keyboard / Pointing Device		82 keys / Touch Pad / Touchscreen (Anti-Reflection, Stylus (included) touch capable)	82 keys / Touch Pad / Digitizer (Anti-Reflection)
Power Supply		AC adaptor or Battery pack	
AC Adaptor[*13]		Input: 100 V to 240 V AC, 50 Hz/60 Hz, Output: 16.0 V DC, 3.75 A	
Battery Pack		Li-ion 10.65 V, 5.7 Ah	
Operating Time[*14]		Approx. 4.5 hours to 8 hours[*15] (Approx. 7 hours[*16])	
Charging Time[*14]	Power on	Approx. 7.5 hours	
	Power off	Approx. 4.5 hours	
Clock Battery		Coin type lithium battery 3.0 V	
Power Consumption[*17]		Approx. 26 W[*18] / Approx. 55 W (Maximum when recharging in the ON state)	
Physical Dimensions (W × H × D) (excluding the hand strap/shoulder strap)		271 mm × 49 mm × 216 mm {10.7" × 1.93" × 8.5"}	
Weight (excluding the hand strap/shoulder strap)		Approx. 2.25 kg {Approx. 4.96 lb.}	Approx. 2.30 kg {Approx. 5.07 lb.}
Operation Environment		Temperature: 5 °C to 35 °C {41 °F to 95 °F} Humidity: 30% to 80% RH (No condensation)	
Storage Environment		Temperature: -20 °C to 60 °C {-4 °F to 140 °F} Humidity: 30% to 90% RH (No condensation)	

Downloaded from www.Manualslib.com manuals search engine

Operating System	Microsoft® Windows® XP Professional Service Pack 2 with Advanced Security Technologies (NTFS File System)	Microsoft® Windows® XP Tablet PC Edition 2005 (NTFS File System)
Utility Programs	DMI Viewer, Microsoft® Windows® Media Player 10, Adobe Reader, PC Information Viewer, SD Utility, Icon Enlarger, Loupe Utility, Intel® Matrix Storage Manager, Intel® PROSet/Wireless Software[*7], Bluetooth™ Stack for Windows® by TOSHIBA[*8] , Wireless Switch Utility, Hotkey Settings, Battery Recalibration Utility, Panasonic Hand Writing[*19], Software Keyboard[*19], Display Rotation Tool, Infineon TPM Professional Package[*20], Recover Pro™ 6[*20] , Tablet Buttons Settings[*19]	
	Setup Utility, Hard Disk Data Erase Utility[*21], PC-Diagnostic Utility	

Wireless LAN <Only for model with wireless LAN>

Intel PRO / Wireless 3945 ABG (802.11 a + b + g)	
Data Transfer Rates[*22]	IEEE802.11a: 54/48/36/24/18/12/9/6 Mbps (automatically switched) IEEE802.11b: 11/5.5/2/1 Mbps (automatically switched) IEEE802.11g: 54/48/36/24/18/12/9/6 Mbps (automatically switched)
Standards Supported	IEEE802.11a/IEEE802.11b/IEEE802.11g
Transmission method	OFDM system, DSSS system
Wireless Channels Used	IEEE802.11a: Channels 36/40/44/48/52/56/60/64/149/153/157/161/165 IEEE802.11b/IEEE802.11g: Channels 1 to 11
RF Frequency Band	IEEE802.11a: 5.18-5.32 GHz, 5.745-5.825 GHz IEEE802.11b/IEEE802.11g: 2.412-2.462 GHz

Bluetooth™ <Only for model with Bluetooth>

Bluetooth Version	2.0 + EDR
Transmission method	FHSS system
Wireless Channels Used	Channels 1 to 79
RF Frequency Band	2.402-2.48 GHz
Power Class	Class1

*1 1 MB = 1,048,576 bytes
*2 You can physically expand the memory upto 4 GB, but the total amount of usable memory available will be less depending on the actual system configuration.
*3 A segment of the main memory is allotted automatically depending on the computer's operating status. The size of the Video Memory cannot be set by the user.
*4 1 GB = 1,000,000,000 bytes. Your operating system or some application software will report as fewer GB.
*5 A 16,777,216 color display is achieved by using the dithering function.
*6 Maximum resolution depends on the specifications of the external display.
*7 Only for model with wireless LAN
*8 Only for model with Bluetooth
*9 For information on TPM, click [start] - [Run] and input "c:\util\drivers\tpm\README.pdf", and refer to the Installation Manual of "Trusted Platform Module (TPM)".
*10 When using ExpressCard/34, the card slot cover cannot be closed.
*11 Operation has been tested and confirmed using Panasonic SD Memory Cards with a capacity of up to 2 GB.
The transfer rate using the SD Memory Card slot on this computer is 8 MB per second. (This is a theoretical value, and differs from actual speeds.)
The transfer rate is 8 MB per second even if you use an SD Memory Card that supports high-speed transfer rates.
Operation on other SD equipment is not guaranteed.
This computer is not compatible with MultiMediaCards or SDHC Memory Cards. Do not insert these kinds of cards.
*12 Theoretical value and not the actual speed. The transfer rate does not become higher even if you use a card that supports the higher transfer rate.
*13 The AC adaptor is compatible with power sources up to 240 V AC adaptor. The computer is supplied with a 125 V AC compatible AC cord. 20-M-2-1
*14 Varies depending on the usage conditions.
*15 Measured using BatteryMark™ Version 4.0.1 (LCD brightness: Maximum - Minimum)
*16 Measured using MobileMark™ 2005 (LCD brightness: 60 cd/m^2)
*17 Approx. 26 W when the battery pack is fully charged (or not being charged) and the computer is OFF.
Approx. 1.2 W when the Wake up from LAN has been enabled.
*18 Rated power consumption 23-E-1
*19 Only for model with Windows XP Professional
*20 You need to install to use the feature.
*21 The Product Recovery DVD-ROM is required.
*22 These are speeds specified in IEEE802.11a+b+g standards. Actual speeds may differ.

Downloaded from www.Manualslib.com manuals search engine

2 Names and Functions of Parts

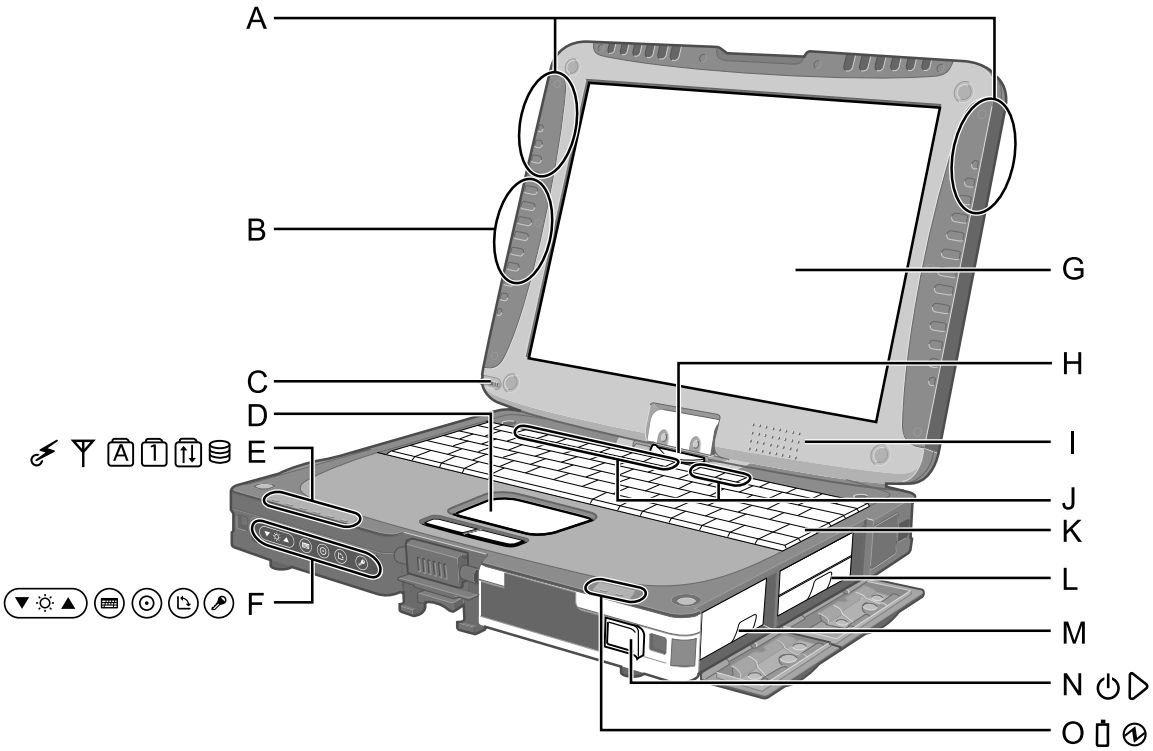

A: Wireless LAN Antenna
<Only for model with wireless LAN>
➔ *Reference Manual* “Wireless LAN”

B: Bluetooth Antenna
<Only for model with Bluetooth>
➔ *Reference Manual* “Bluetooth”

C: Stylus/Pen Holder
D: Touch Pad
E: LED Indicator
: Wireless ready
This indicator lights when Wireless LAN, Bluetooth, and/or Wireless WAN are connected and ready. It does not necessarily indicate the On/Off condition of the wireless connection.
➔ *Reference Manual* “Wireless Switch Utility”
: Wireless WAN status
<Only for model with wireless WAN>
➔ Refer to the instruction manual of the wireless device.
: Caps lock
: Numeric key (NumLk)
: Scroll lock (ScrLk)
: Hard disk drive status

F: Tablet Buttons
➔ *Reference Manual* “Tablet Buttons”

G: LCD
<Only for model with touchscreen>
➔ *Reference Manual* “Touchscreen”
<Only for model with digitizer>
➔ *Reference Manual* “Digitizer”

H: Display Release Latch
➔ page 12 “Switching to the Tablet mode”

I: Speaker
➔ *Reference Manual* “Key Combinations”

J: Function Key
➔ *Reference Manual* “Key Combinations”

K: Keyboard
L: Hard Disk Drive
➔ *Reference Manual* “Hard Disk Drive”

M: Battery Pack
N: Power Switch
O: LED Indicator
: Battery status
➔ *Reference Manual* “Battery Power”
: Power status
(Off: Power off/Hibernation, Green: Power on, Blinking green: Standby)

A lithium ion battery that is recyclable powers the product you have purchased.
Please call 1-800-8-BATTERY for information on how to recycle this battery.

L’appareil que vous vous êtes procuré est alimenté par une batterie au lithium-ion.
Pour des renseignements sur le recyclage de la batterie, veuillez composer le 1-800-8-BATTERY.

Downloaded from www.Manualslib.com manuals search engine

Left side

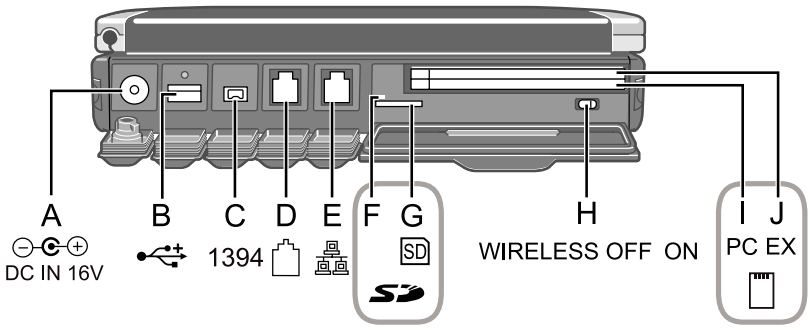

Rear side

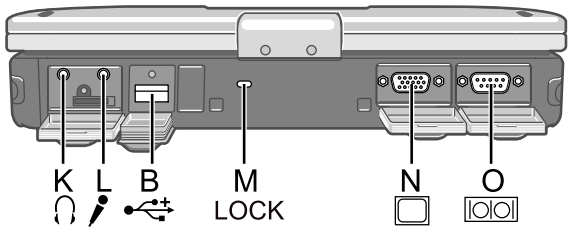

Bottom

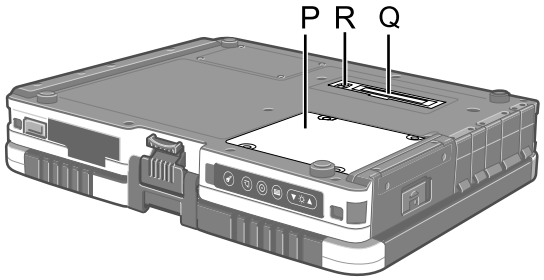

A: DC-IN Jack

B: USB Port

➔ *Reference Manual* "USB Devices"

C: IEEE 1394 Interface Connector

➔ *Reference Manual* "IEEE 1394 Devices"

D: Modem Port

➔ *Reference Manual* "Modem"

E: LAN Port

➔ *Reference Manual* "LAN"

F: SD Memory Card Indicator

(Blinking: During access)

➔ *Reference Manual* "SD Memory Card"

G: SD Memory Card Slot

➔ *Reference Manual* "SD Memory Card"

H: Wireless Switch

➔ *Reference Manual* "Wireless Switch Utility"

I: PC Card Slot

➔ *Reference Manual* "PC Card / ExpressCard"

J: ExpressCard Slot

➔ *Reference Manual* "PC Card / ExpressCard"

K: Headphone Jack

You can connect headphones or amplified speakers. When they are connected, audio from the internal speakers is not heard.

L: Microphone Jack

A condenser microphone can be used. If other types of microphones are used, audio input may not be possible, or malfunctions may occur as a result.

- When recording in stereo using a stereo microphone:
  Double-click in the notification area, click [Options] - [Properties], and add a check mark for [Recording], click [OK] - [Options] - [Advanced Controls] - [Advanced], remove a check mark for [Mono Microphone], and then click [Close].
  When using a monaural microphone with a 2-terminal plug:
- With the settings outlined above, only audio on the left track will be recorded.
  When monitoring the microphone audio using headphones, sounds on the left track cannot be heard, regardless of the above settings. This is a result of the computer's specifications, and is not a malfunction.

M: Security Lock

A Kensington cable can be connected.
For further information, read the manual that comes with the cable.

N: External Display Port

➔ *Reference Manual* "External Display"

O: Serial Port

P: RAM Module Slot

➔ *Reference Manual* "RAM Module"

Q: Expansion Bus Connector

➔ *Reference Manual* "Port Replicator / Car Mounter"

R: External Antenna Connector

Downloaded from www.Manualslib.com manuals search engine

Downloaded from www.Manualslib.com manuals search engine

4 Diagnosis Procedure

4.1. Basic Procedures

The basic procedures for diagnosis, disassembly, and test of defective parts of a set to be repaired are summarized below. For details, refer to relevant pages in the Service Manual.

● **Flow Chart**

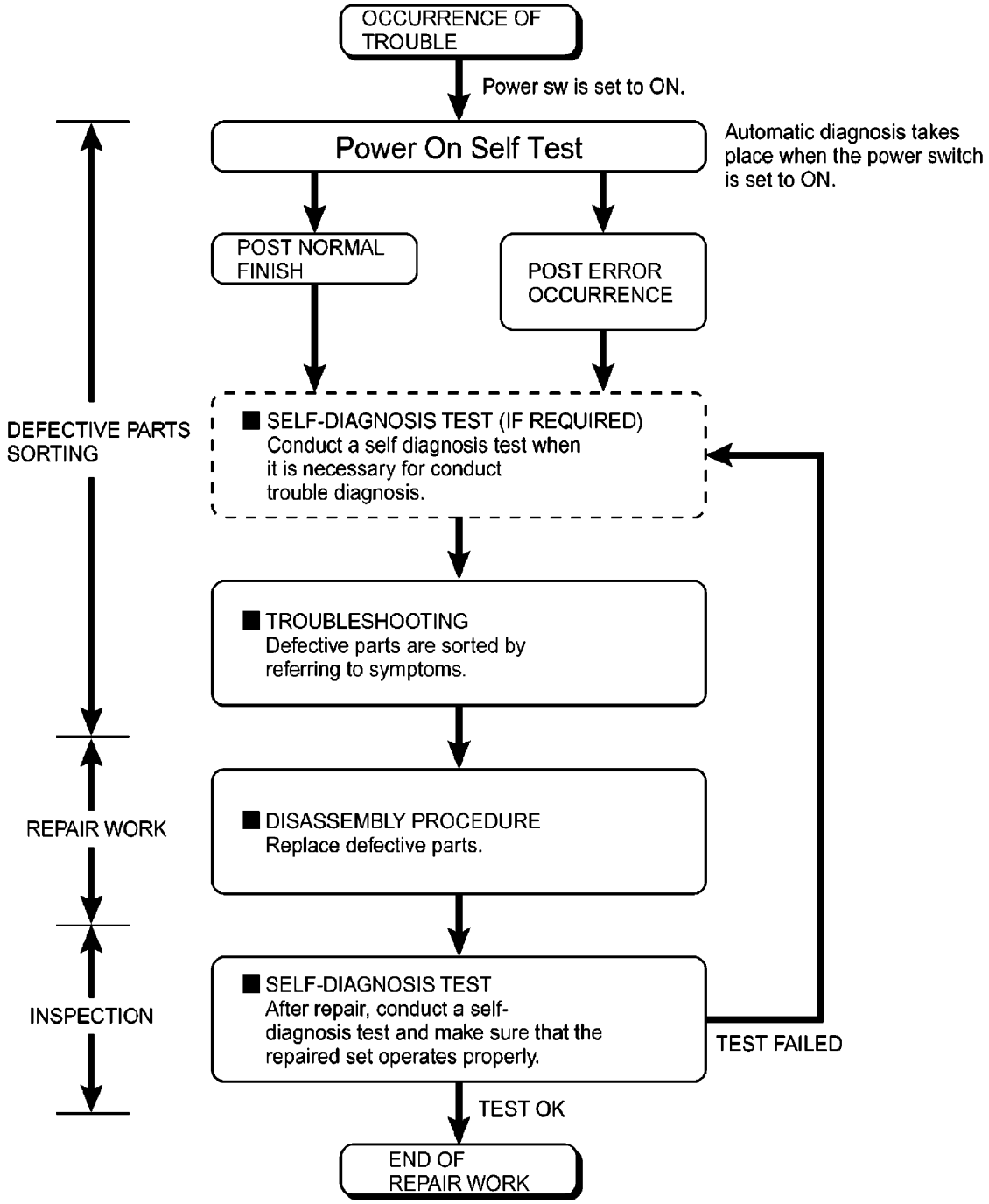

Downloaded from www.Manualslib.com manuals search engine

4.2. Troubleshooting

Please take note of the following two points with regard to troubleshooting:

1. Know-how of diagnosis upon occurrence of heavy troubles, e.g. Set cannot be turned ON , Set fails to start , No display on screen , etc.
2. Explanation of each trouble, mainly symptom of trouble in operation.

● Flow Chart

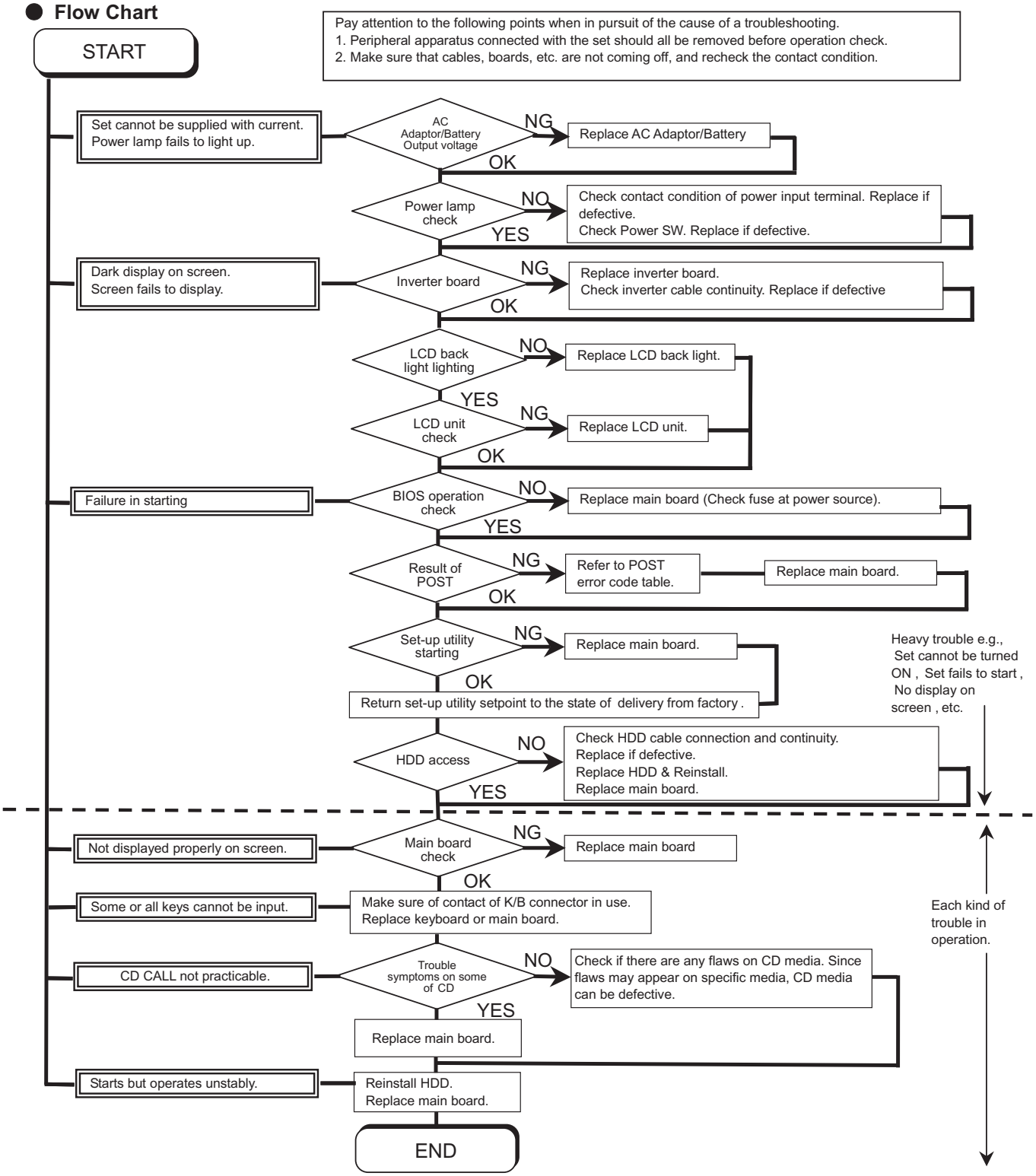

Downloaded from www.Manualslib.com manuals search engine

5 Power-On Self Test (Boot Check)

Outline of POST

The set has a boot check function called POST (Power-On Self Test) in it.
The condition of the main body is diagnosed by checking beep sound or error code.

Start .....Test begins automatically when power switch is set to ON.

Normal finish .....After memory checking, a beep sound is issued once and the set is placed into automatic stop.

Note: If no error occurs, nothing is displayed. (No display of OK, etc.)

Error Diagnosis by Checking Beep Signal Sound

The beep sound is as follows:

(1 (long sound) -2-3-4)

(Length of bar shows length of sound.)

▬ = long sound (about 0.4 sec.), ■ = short sound (about 0.2 sec.), Length between sounds is about 0.1 sec.

Table of errors classified by beep sounds

Diagnosis	Beep signal sound	Error message
Main board	1(long sound)-2	BIOS ROM error
	1-2-2-3	BIOS ROM error
	1-3-1-1	RAM error
	1-3-1-3	Keyboard controller error
	1-3-4-1	RAM error
	1-3-4-3	RAM error
	1-4-1-1	RAM error
	2-1-2-3	BIOS ROM error
	2-2-3-1	Occurrence of unexpected offering

(Note) A beep sound is also issued in case of other I/O trouble.

Downloaded from www.Manualslib.com manuals search engine

6 List of Error Codes <Only when the port replicator is connected>

The following is a list of the messages that BIOS can display. Most of them occur during POST. Some of them display information about a hardware device, e.g., the amount of memory installed. Others may indicate a problem with a device, such as the way it has been configured. Following the list are explanations of the messages and remedies for reported problems.
If your system displays one of except the messages marked below with an asterisk (*), write down the message and contact Panasonic Technical Support. If your system fails after you make changes in the Setup menus, reset the computer, enter Setup and install Setup defaults or correct the error.

0200 Failure Fixed Disk
Fixed disk in not working or not configured properly. Check to see if fixed disk is attached properly. Run Setup. Find out if the fixed-disk type is correctly identified.

0210 Stuck key
Stuck key on keyboard.

0211 Keyboard error
Keyboard not working.

0212 Keyboard Controller Failed
Keyboard controller failed test. May require replacing keyboard controller.

0213 Keyboard locked - Unlock key switch
Unlock the system to proceed.

0230 System RAM Failed at offset : *nnnn*
System RAM failed at offset *nnnn* of in the 64k block at which the error was detected.

0231 Shadow RAM Failed at offset : *nnnn*
Shadow RAM failed at offset *nnnn* of the 64k block at which the error was detected.

0232 Extended RAM Failed at offset : *nnnn*
Extended memory not working or not configured properly at offset *nnnn*.

0250 System battery is dead - Replace and run SETUP
The CMOS clock battery indicator shows the battery is dead. Replace the battery and run Setup to reconfigure the system.

***0251 System CMOS checksum bad - Default configuration used**
System CMOS has been corrupted or modified incorrectly, perhaps by an application program that changes data stored in CMOS. The BIOS installed Default SETUP Values. If you do not want these values, enter Setup and enter your own values. If the error persists, check the system battery or contact Panasonic Technical Support.

0260 System timer error
The timer test failed. Requires repair of system board.

0270 Real time clock error
Real-time clock fails BIOS test. May require board repair.

***0280 Previous boot incomplete - Default configuration used**
Previous POST did not complete successfully. POST loads default values and offers to run Setup. If the failure was caused by incorrect values and they are not corrected, the next boot will likely fail. On systems with control of **wait states**, improper Setup settings can also terminate POST and cause this error on the next boot. Run Setup and verify that the wait-state configuration is correct. This error is cleared the next time the system is booted.

0281 Memory Size found by POST differed from EISA CMOS
Memory size found by POST differed from EISA CMOS.

Downloaded from www.Manualslib.com manuals search engine

02D0 System cache error - Cache disabled
Contact Panasonic Technical Support.

02F0: CPU ID:
CPU socket number for Multi-Processor error.

02F4: EISA CMOS not writable
ServerBIOS2 test error: Cannot write to EISA CMOS.

02F5: DMA Test Failed
ServerBIOS2 test error: Cannot write to extended DMA (Direct Memory Access) registers.

02F6: Software NMI Failed
ServerBIOS2 test error: Cannot generate software NMI (Non-Maskable Interrupt).

02F7: Fail - Safe Timer NMI Failed
ServerBIOS2 test error: Fail-Safe Timer takes too long.

***device* address Conflict**
Address conflict for specified *device*.

Allocation Error for: *device*
Run ISA or EISA Configuration Utility to resolve resource conflict for the specified *device*.

Failing Bits : *nnnn*
The hex number *nnnn* is a map of the bits at the RAM address which failed the memory test. Each 1 (one) in the map indicates a failed bit. See error 230,231 or 232 for offset address of the failure in System, Extended or Shadow memory.

Invalid System Configuration Data
Problem with NVRAM (CMOS) data.

I/O device IRQ conflict
I/O device IRQ conflict error.

Operating System not found
Operating system cannot be located on either drive A: or drive C:. Enter Setup and see if fixed disk and drive A: are properly identified.

Parity Check 1 *nnnn*
Parity error found in the system bus. BIOS attempts to locate the address and display it on the screen. If it cannot locate the address, it displays ????. Parity is a method for checking errors in binary data. A parity error indicates that some data has been corrupted.

Parity Check 2 *nnnn*
Parity error found in the I/O bus. BIOS attempts to locate the address and display it on the screen. If it cannot locate the address, it displays ????.

Press <F1> to resume, <F2> to Setup
Displayed after any recoverable error message. Press <F1> to start the boot process or <F2> to enter a Setup and change the settings. Write down and follow the information shown on the screen.

Downloaded from www.Manualslib.com manuals search engine

7 Self Diagnosis Test

As for the self-diagnosis test(PC-Diagnostic utility) to use this model, a standard test and the enhancing test by the module of the main body building in are possible.

● Notes To skip BIOS password

Use <Ctrl>+<F10> key to skip BIOS password or authentication of fingerprint.
This key is only for entering DIAG mode. Not available to boot the computer.
If customer set "HDD Lock", the DIAG program cannot perform HDD test.
*This key is for service purpose only. Do not disclose this information to unrelated others.

1. Beginning of self-diagnosis test

1-1. Setting of content of setup

1. The power supply of the computer is turned on.
2. " F2 " is pushed on the screen of "Panasonic" while " press <F2 to enter Setup> " is displayed.
3. The setup utility starts and then takes notes of the content of the BIOS setup of present set.
4. " F9 " is pushed, " Yes" is selected on the screen of " Is the default value loaded? ", and " Enter" is pushed.
5. " F10 " is pushed.
6. " Yes" is selected on the screen of the setup confirmation, and " Enter" is pushed.
7. The computer starts automatically.

Attention

- If the device which can be set is set to "Invalidity" by "Advanced" or "Security" menu, becomes an error by "PC-Diagnostic utility".
  (It is judged that the device which can be set to "Invalidity" by "Main" menu such as "Flat pad" is normal if the controller operates normally though sets to "Invalidity" by the setup.)
- In the model with built-in DVD of the USB connection, even if DVD is normal, becomes an error if legacy USB is set to "Invalidity"

1-2. When you execute an automatic test

1. "Ctrl" + "F7" is pushed while the "Panasonic" start screen is displayed after the computer is started.
2. The test of all devices begins automatically by "PC-Diagnostic utility"'s starting.

Attention

- It is a test which the customer who bought PC can execute. (As for HDD, the enhancing test is also possible.)
- A flat pad does not work for a while after starting "PC-Diagnostic utility".
- The movement of a flat pad might become abnormal If after RAM begins from the CPU/System test, a flat pad will be operated in about 30 seconds. In that case,restarts pushing"Alt" + "Ctrl" + "Del" key. Or, please start "PC-Diagnostic utility" again after doing the power supply switch in the slide, and turning off the power supply.

1-3. When you execute the enhancing test

1. Please let me discontinue diagnosing clicking to end an automatic test.

2. Please click on the character of "D" "PC-Diagnostic utility" on the screen while pushing both of right "Shift" and left "Shift" keys.

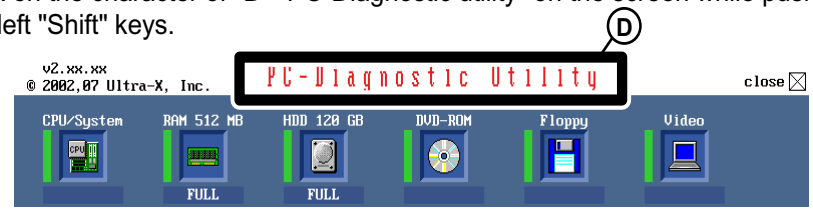

3. All devices which can select the enhancing test make the setting of the enhancing test possible.
4. The district device is made"FULL" display (enhancing test).
5. The test begins clicking .

*Please refer to item 4 for the error result of each test and the division of the breakdown part.

Downloaded from www.Manualslib.com manuals search engine

2. Operation of PC-Diagnostic Utility

-Only the device which can be inspected on the entire screen is displayed.
-The item does not appear when the device of wireless LAN etc. is not physically connected.
-The movement of the item must use an arrow key or a flat pad.

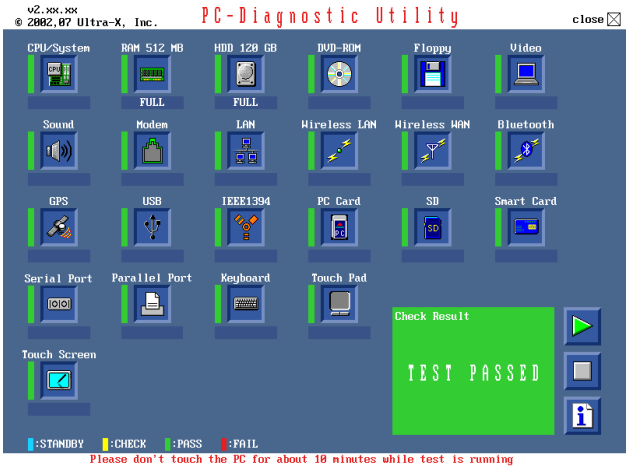

-As for the device under the diagnosis, blue and yellow are alternately displayed at the left of the icon.
- The diagnosis result of the device greens at the left of the icon when it is normal, and becomes red when abnormal.

-When the test of all devices ends, the test result is displayed under the right of the screen.

-Please click while diagnosing when being stop on the way by the time the test of all devices ends.

-Please click when you restart "PC-Diagnostic utility".

*Each device is tested from the beginning, and it is not possible to restart on the way.

Downloaded from www.Manualslib.com manuals search engine

2-1. Selection of tested device

-To test only a specific device, "Test" and "Do not test" of each device can be selected.
-The device which can select the enhancing test changes in order of "The standard is tested" and "Do not test" whenever the device icon is clicked.

Start the standard test

Do not test

Please begin testing clicking if the selection of the tested device ends.

2-2. "PC-Diagnostic utility" End method

When ☒ of "Close" on the right of the screen is clicked, the computer reactivates automatically. Or, the power supply switch is done in the slide and the power supply is turned off.

2-3. The content of the setup is returned to the setting of the user

1. Turned on the computer.
2. "F2" is pushed on the screen while "Press<F2>to enter Setup" is displayed of "Panasonic".
3. Push "F10", and on the screen of "Is the change in the setting preserved and do end?"and then "Yes" is selected, and "Enter" is pushed.
4. The computer reactivates automatically.
5. The end option is chosen by the start menu, and the power supply of the computer is turned off.

Standard at test time
All devices other than RAM and HDD -------- about 1 minute
RAM standard test ---------- 1 - 2 minutes
HDD standard test ---------- 2 - 3 minutes
HDD enhancing test (60GB) ---------- about 40 minutes

Ex.The standard when the standard <all device> is tested becomes 1+2+3=6 minutes.

- There is greatly a difference from RAM test when the memory is increased according to the performance of the memory occasionally.
- Moreover, when the main body of PC under the test is a high temperature, it occasionally takes time.
- There is greatly a difference from HDD according to the performance of the drive occasionally.

Downloaded from www.Manualslib.com manuals search engine

7.1. Test Item and Division of trouble

Test item	Stanard	Enhancing	Content of standard test	Content of enhancing test	Place with possibility of breakdown
CPU / SYSTEM	○	—	CPU is shifted to protected mode, and "Violation of the paging", "Operation of the violation of a privileged instruction", and DMA, INT, TIMER, and the RTC operation are confirmed.	—	CPU / Main board
RAM	○	—	All memory space is tested in a special memory access pattern based on "R.S.T . technology".	—	Memory / Mainboard
HDD	○	○	The record area frequently accessed with Microsoft Windows XP to test in about two minutes regardless of points of HDD is emphatically tested.	All record area is tested.	HDD / Mainboard / Cable / Connector
MODEM	○	—	It is confirmed not to find abnormality in the AC97 modem controller.	—	MODEM/ Mainboard
Wireless LAN	○	—	It is confirmed not to find abnormality in the Wireless LAN modem controller.	—	Wireless LAN board / Connector / Mainboard
Sound *5	○	—			
USB	○	○ *1	It is confirmed not to find abnormality in the USB controller.	It is confirmed not to find abnormality in the wiring between the USB controller and the connector by confirming the connection of the USB equipment connected with the USB connector.	Mainboard / Connector
LAN	○	○ *2	It is confirmed not to find abnormality in the LAN controller.	It is confirmed not to find abnormality in the wiring between the controller and the connector by connecting to HUB with LAN cable.	Mainboard / Connector
PC Card	○	—	It is confirmed not to find abnormality in the CardBus controller.	—	Mainboard
SD	○	—	It is confirmed not to find abnormality in the SD controller.	—	Mainboard
Keyboard	○	○ *3	It is confirmed not to find abnormality in keyboard controller's keyboard interface.	The key is actually input, and the operation is displayed on the screen.	Mainboard / Keyboard
Touch Pad	○	○ *4	Whether keyboard controller's mouse interface operates normally is confirmed.	The operation is actually displayed on the screen by operating the touch pad.	Mainboard / Touch Pad
DVD-ROM	○	○ *6	The drive is normally reset, and it is accessible is confirmed.	It is confirmed to be able to read media normally.	Mainboard / Touch Pad

Downloaded from www.Manualslib.com manuals search engine

Test Item	Standard	Enhanced	Content of Standard Test	Content of Extend Test	The place with possibility of breakdown
Touch Screen	○	○	It is confirmed not to find abnormality in the USB connection of Touch Screen. This test cannot find abnormality of Touch Screen.	Perform Touch Screen functionality practically. Operator has to judge PASS/FAIL with test result.	Main board/ Touch Screen
Bluetooth	○		It is confirmed not to find abnormality in the connection of Main board and Bluetooth module.	—	Bluetooth cable
Wireless WAN	○	—	It is confirmed not to find abnormality in the connection of Main board and Wireless WAN module.	—	WWAN cable
Floppy	○	—	It is confirmed not to find abnormality in the legacy FD drive. This test cannot find abnormality of mechanical breakdown. (e.g.. Head, Motor)	—	FD Drive/ Main board (Super I/O)/ FDD cable FDD connector
Video	○	—	It is confirmed not to find abnormality in access to VRAM with VESA. The PC which uses main memory as VRAM may fail with main memory failure.	—	Main board (Chipset, Graphic Controller)/ Memory
GPS	○	—	It is confirmed not to find abnormality in the connection of Main board and GPS	—	GPS cable
IEEE1394	○	—	It is confirmed not to find abnormality in the IEEE1394 controller.	—	Main board (IEEE1394 Controller)
Express Card	—	○	—	It is confirmed not to find abnormality in the wiring between Chipset and Express Card.	Main board (Chipset)/ Express Card Connector
Smart Card	○	—	It is confirmed not to find abnormality in the Smart Card controller.	—	Main board (Smart Card Controller)
Serial Port	○	○ *7	It is confirmed not to find abnormality of Super I/O UART function. This test cannot find lack of wiring between Super I/O and Serial Connector.	It is confirmed not to find abnormality in the wiring between Super I/O and Serial Connector. This test cannot find failure of cable characteristic and device problems.	Main board (Super I/O)/ Serial Connector
Parallel Port	○	○ *8	It is confirmed not to find abnormality of Super I/O parallel function. This test cannot find lack of wiring between Super I/O and Parallel Connector.	It is confirmed not to find abnormality in the wiring between Super I/O and Parallel Connector. This test cannot find failure of cable characteristic and device problems.	Main board (Super I/O)/ Parallel Connector

*1 Please connect the USB device with the port (USB connector) which wants to test before the tests.
*2 Please connect LAN port with LAN HUB with LAN cable before the tests.
*3 The operator actually inputs the key, and the operator judges PASS/FAIL of the test.
*4 The operator actually operates the mouse, and the operator judges PASS/FAIL of the test.
*5 It is not abnormal though the sound is emitted from the speaker while testing.
※ When the test result is PASS, trouble is thought by not hearing of the sound under the test from the speaker and the headphone by the wiring of the audio output system.
*6 Please set DVD/CD media in the drive before the tests.
*7 Please set a Special Loop Back Connector Tool at serial connector for Enhanced Test. (This Connector Tool is same as the one used before.)
*8 Please set a Special Loop Back Connector Tool at parallel connector for Enhanced Test. (This Connector Tools is same as the one used before.)

Downloaded from www.Manualslib.com manuals search engine

8 Wiring Connection Diagram

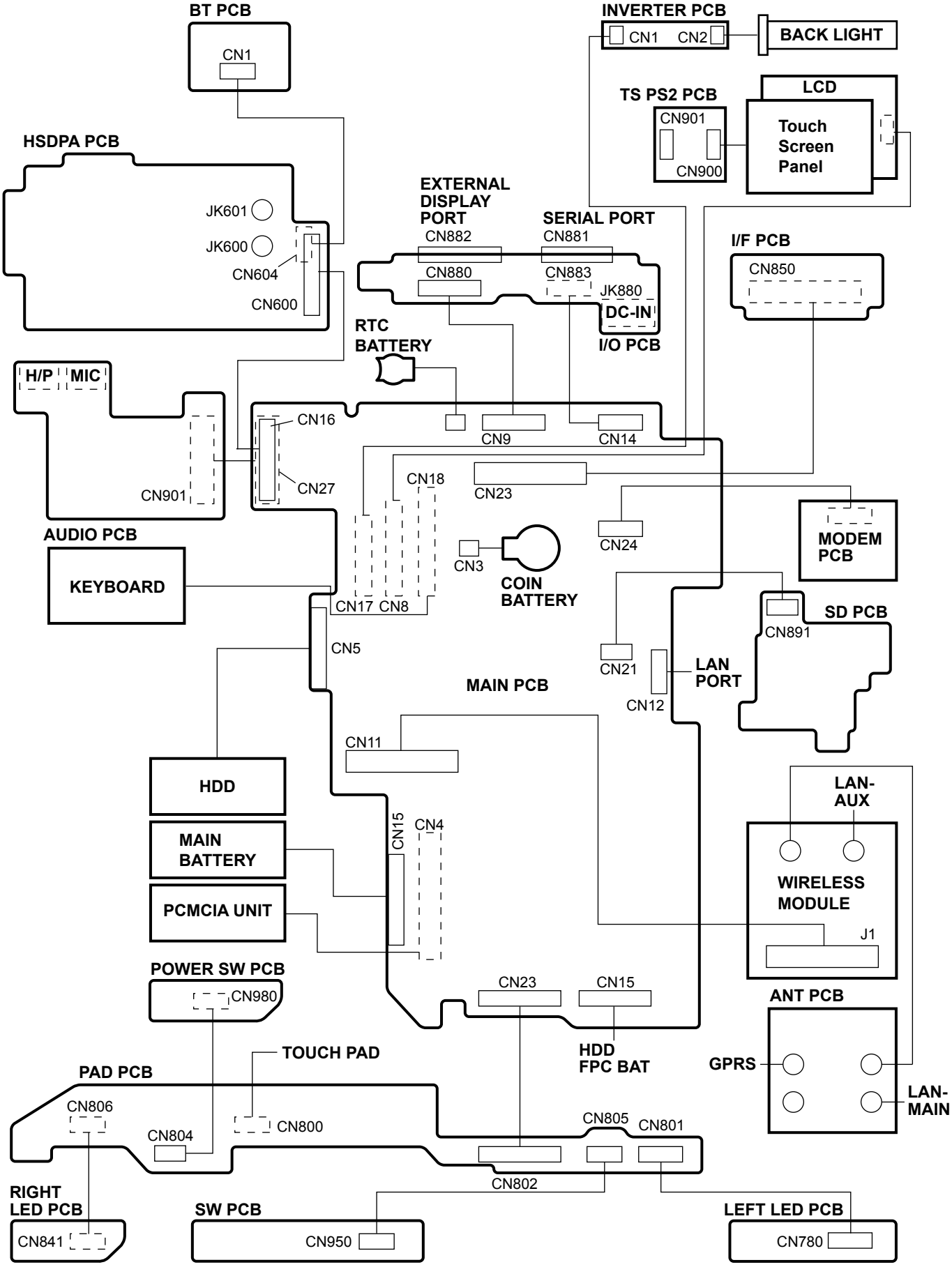

Downloaded from www.Manualslib.com manuals search engine

9 Disassembly/Reassembly

Note:

Power off the computer. Do not shut down to the Suspend or hibernation mode.

Do not add peripherals while the computer is in the Suspend or hibernation mode; abnormal operation may result.

9.1. Disassembly Instructions

9.1.1. Preparation

Before disassembling, be sure to make the following preparations.

- Shut down Windows and turn off the power.
- Disconnect the AC adaptor.
- Remove the optional DIMM memory card and PCMCIA card if they are connected.
- Remove other devices if they are connected.

Attention:

- Please execute writing BIOS ID when you exchange the Main Board.
- Parts (Sheet and rubber) etc. related various the Conductive Cloth and Heat Spreader cannot be recycled. Use new parts.

9.1.2. Removing the Battery Pack and HDD Pack

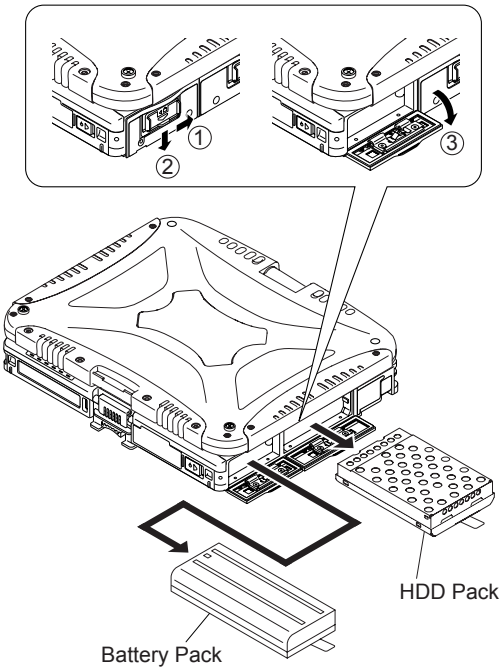

1. Open the Battery Cover.
2. Remove the Battery Pack.
3. Open the HDD Cover.
4. Remove the HDD Pack.

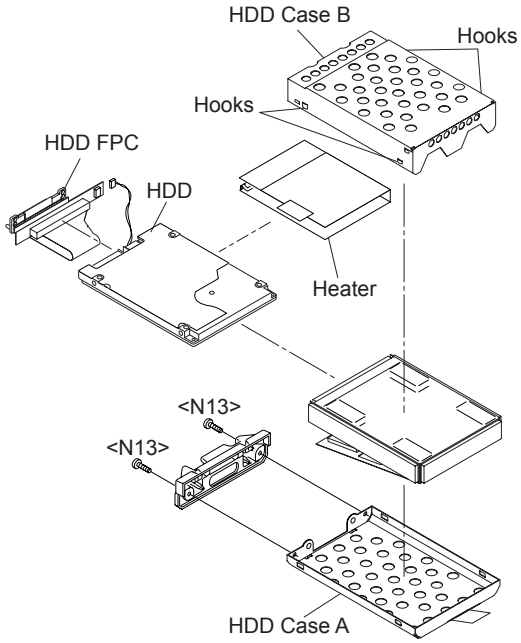

5. Remove the two Screws <N13>.
6. Remove the HDD Case A and the HDD Case B.
7. Remove the HDD

Screws <N13> : DXQT2+D4FNL

9.1.3. Removing the Touch Pad and Keyboard

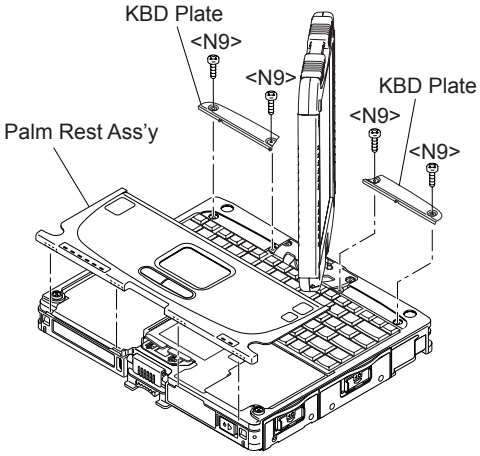

1. Remove the Palm Rest Ass'y.

   Note:

   The Palm Rest Ass'y is firmly fixed with two-sided tape.

   Carefully remove the Palm Top Cover Sheet not to damage it.
2. Remove the 4 Screws <N9>.
3. Remove the KBD Plate.

Downloaded from www.Manualslib.com manuals search engine

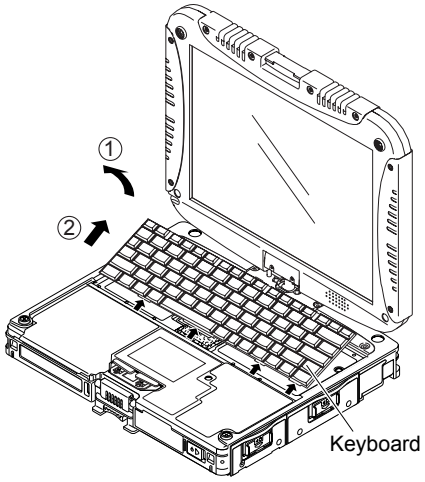

4. Lift the far side of the Keyboard and slide it to backward, and then turn the Keyboard over frontward.

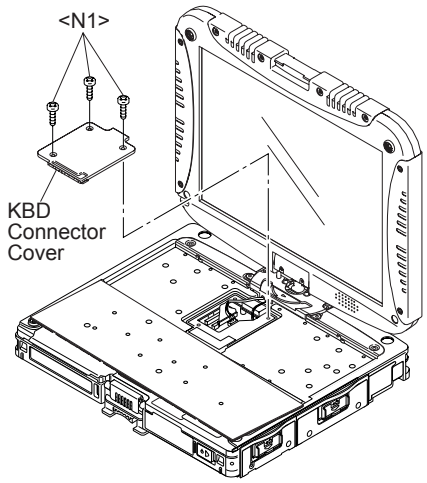

5. Remove the 3 Screws <N1>.
6. Remove the KBD Connector Cover.

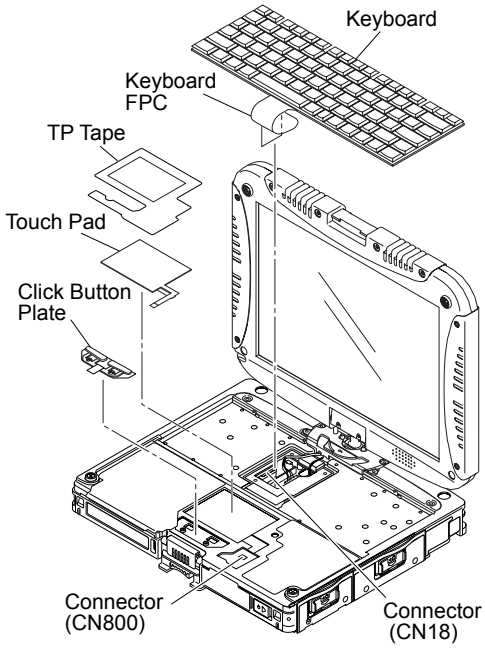

7. Disconnect the Cable from Connector (CN18).
8. Remove the Keyboard.
9. Remove the TP Tape.
10. Disconnect the Cable from Connector (CN800).
11. Remove the Touch Pad and Click Button Plate.

Screws <N1> : DFHE5025XA
Screws <N9> : DRSB2+5FKL

9.1.4. Removing the DIMM Lid Ass'y

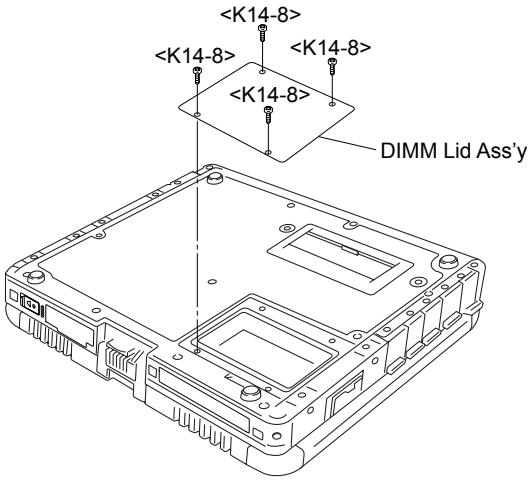

1. Remove the 4 Screws <K14-8>.
2. Remove the DIMM Lid Ass'y.

Screws <K14-8> : DRHM5025YAT

9.1.5. Removing the Rear Cabinet

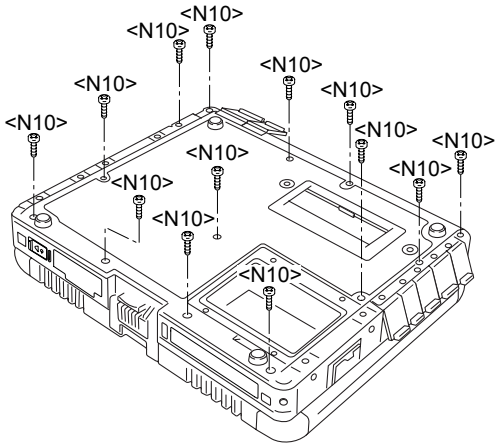

1. Remove the 13 Screws <N10>.
2. Open the LID Rubbers.
3. Remove the Rear Cabinet.

Screws <N10> : DRHM0061ZA

Downloaded from www.Manualslib.com manuals search engine

9.1.6. Removing the DU Lid Unit

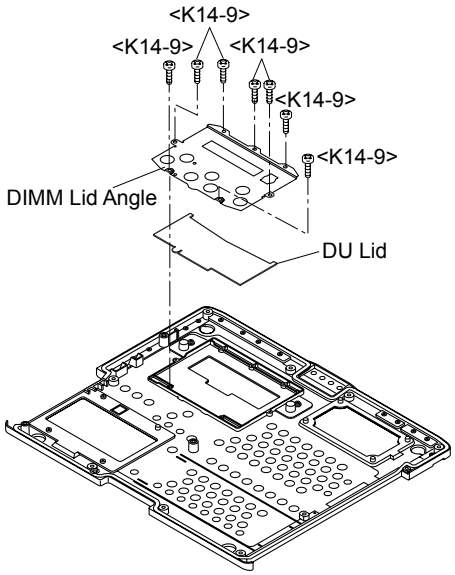

1. Remove the 7 Screws <K14-9>.
2. Remove the DU Lid Angle and DU Lid.

Screws <K14-9> : DXQT2+D25FNL

9.1.7. Removing the HSDPA PCB and Bluetooth PCB

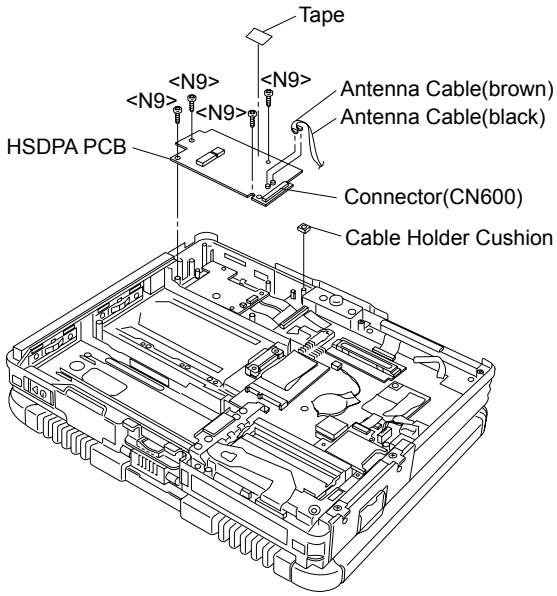

1. Remove the Cable Holder Cushion.
2. Disconnect the 2 Antenna Cables (brown, black).
3. Remove the Tape.
4. Remove the 4 Screws. <N9>
5. Disconnect the Cable from the Connector (CN600).

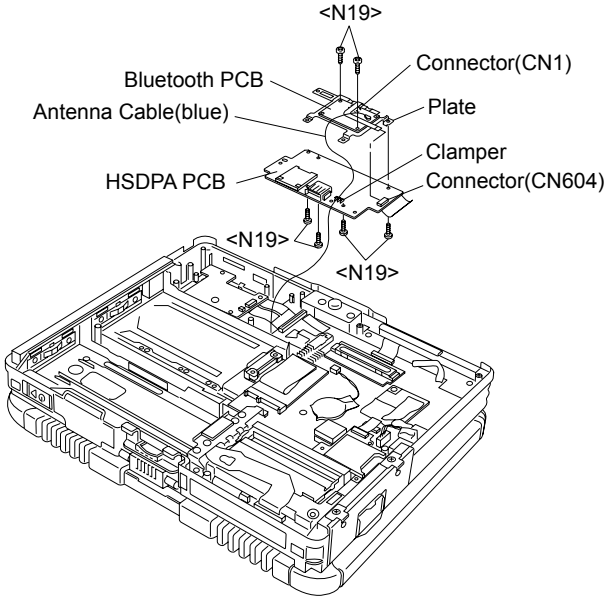

6. Disconnect the Antenna Cable from the Clamper.
7. Disconnect the Antenna Cable.
8. Remove the 4 Screws. <N19>
9. Disconnect the Cable from the Connector (CN604).
10. Remove the 2 Screws. <N19>
11. Disconnect the Cable from the Connector (CN1) and remove the Bluetooth PCB and HSDPA PCB.

Screws <N9> : DRSB2+5FKL
Screws <N19> : XSB2+3FNL

9.1.8. Removing the Audio PCB

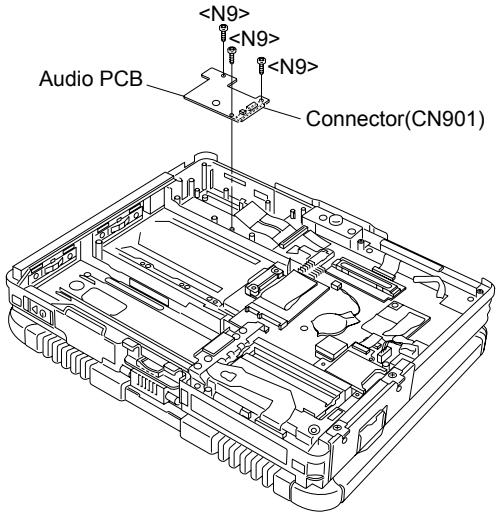

1. Remove the 3 Screws <N9>.
2. Disconnect the Cable from a Connector (CN901).
3. Remove the Audio PCB.

Screws <N9>:DRSB2+5FKL

Downloaded from www.Manualslib.com manuals search engine

9.1.9. Removing the Main PCB, Wireless Module, SD PCB, Antenna PCB and Modem PCB

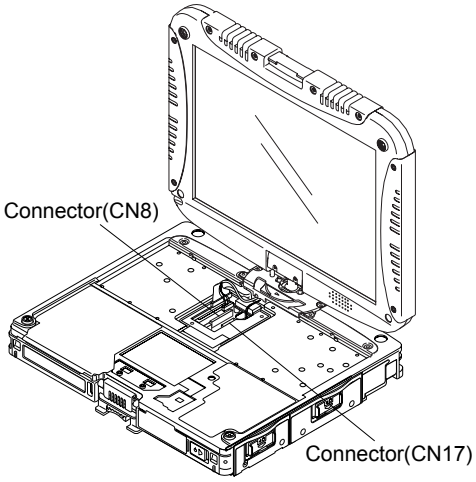

Note:

This procedure is not necessary if the computer is not equipped with Wireless Module or Modem PCB.

1. Disconnect the 2 LCD Cables. (CN8,CN17)

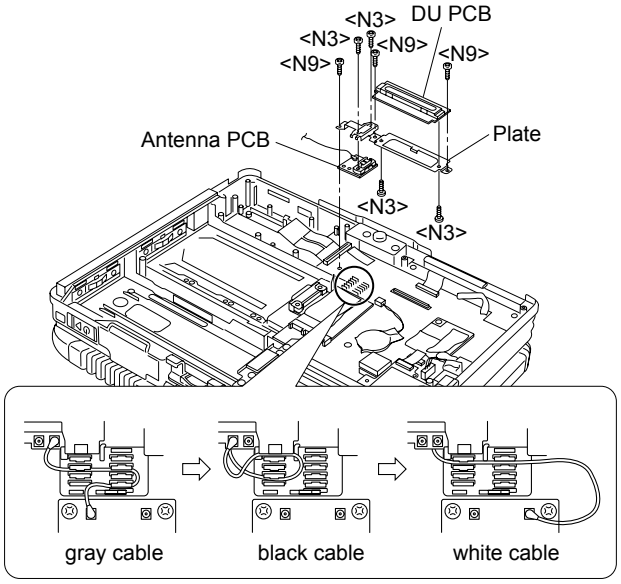

2. Remove the gray, black and white Antenna Cables.
3. Remove the 2 Screws <N3> and the 3 Screws <N9>.
4. Remove the 2 screws <N3>, and remove the DU PCB, Plate and Antenna PCB.

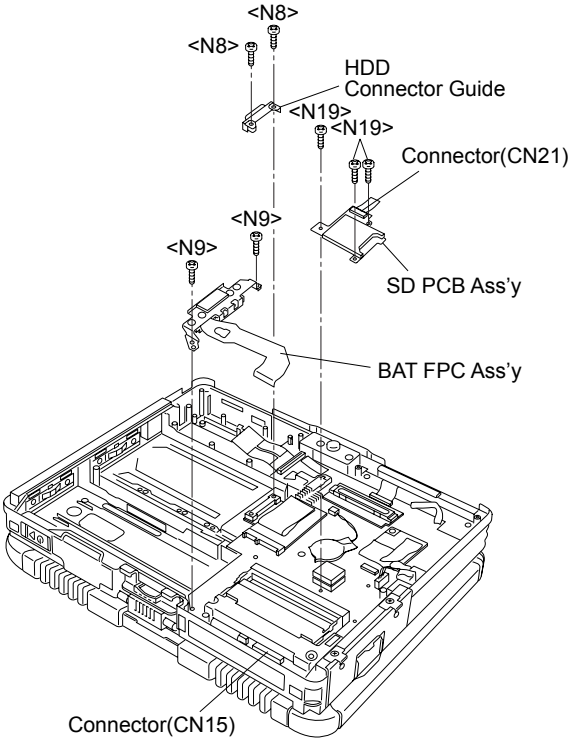

5. Remove the 2 Screws <N8>, and remove the HDD Connector Guide.
6. Remove the 2 Screws. <N9>
7. Disconnect the Cable from the Connector. (CN15)
8. Remove the BAT FPC Ass'y.
9. Remove the 3 Screws. <N19>
10. Disconnect the Cable from the Connector (CN21), and remove the SD PCB Ass'y.

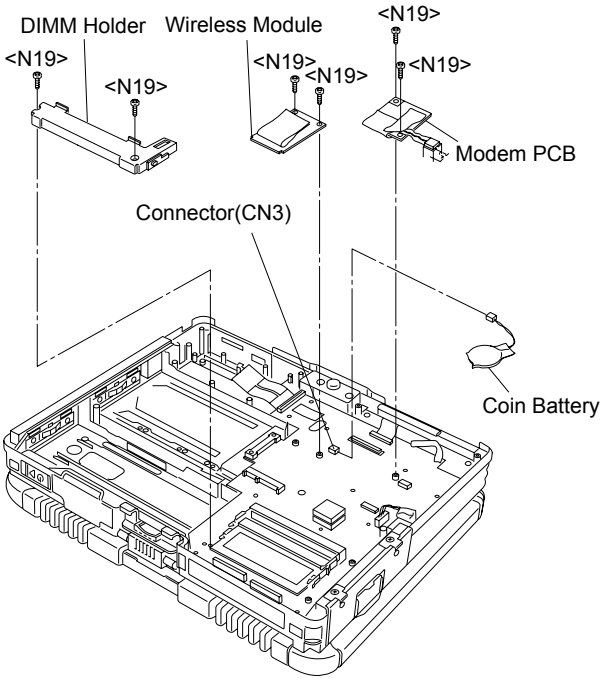

11. Disconnect the Cable from the Connector (CN3), and remove the Coin Battery.
12. Remove the 2 Screws <N19>, and remove the Wireless Module.
13. Remove the 2 Screws <N19>, and remove the Modem PCB.

Downloaded from www.Manualslib.com manuals search engine

14. Remove the 2 Screws <N19>, and remove the DIMM Holder.

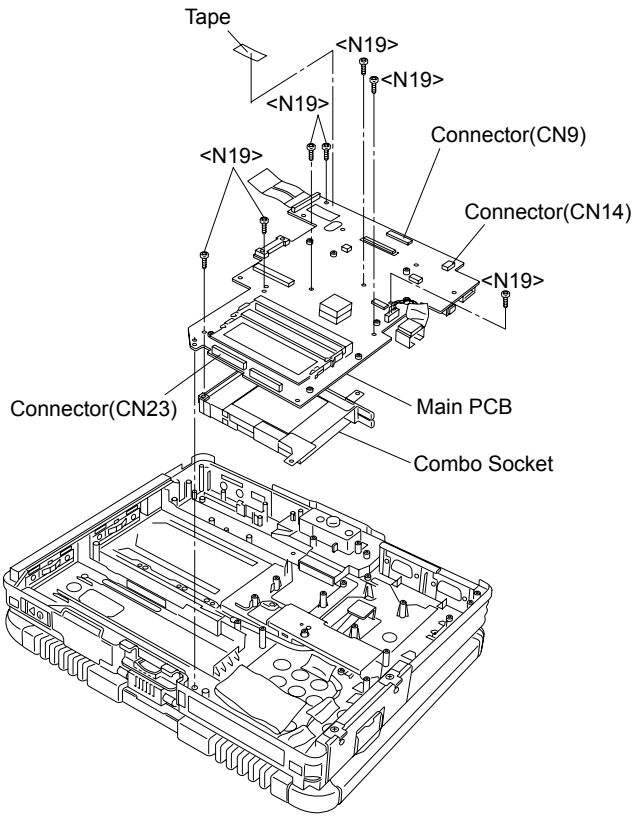

15. Remove the Tape.
16. Disconnect the 3 Cables from the 3 Connectors. (CN9,CN14,CN23)
17. Remove the 7 Screws <N19>, and remove the Main PCB and Combo Socket.

Screws <N3> : DFHE5108ZA
Screws <N8> : DRSB2+10FKL
Screws <N9> : DRSB2+5FKL
Screws <N19> : XSB2+3FNL

9.1.10. Removing the I/O PCB Ass'y

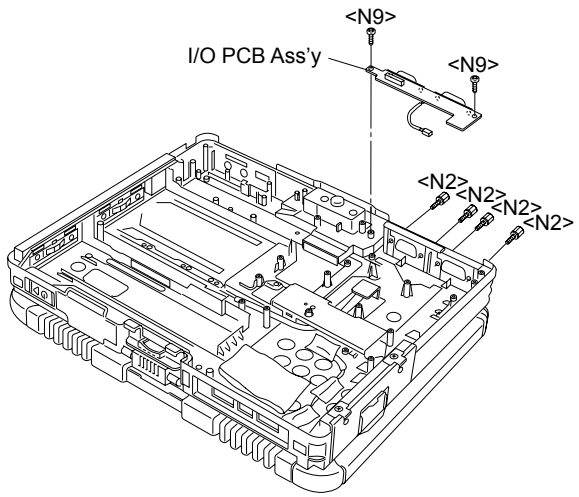

1. Remove the 4 D-SUB Screws <N2>.
2. Remove the 2 Screws <N9>.
3. Remove the I/O PCB Ass'y.

Screws <N2> : DFHE5058ZB
Screws <N9> : DRSB2+5FKL

9.1.11. Removing the Power SW PCB

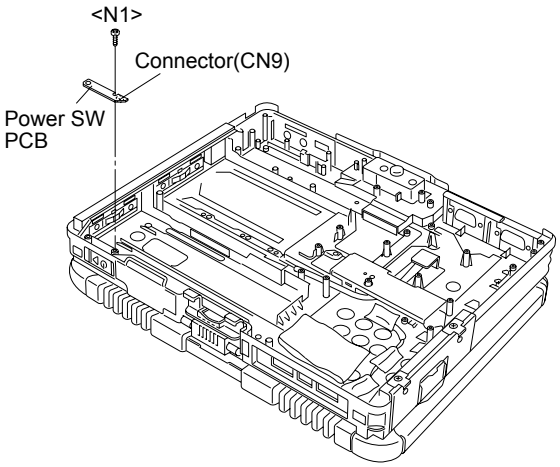

1. Remove the Screw <N1>.
2. Disconnect the Cable from the Connector (CN9).
3. Remove the Power SW PCB.

Screw <N1> : DFHE5025XA

9.1.12. Removing the left LED and right LED PCB

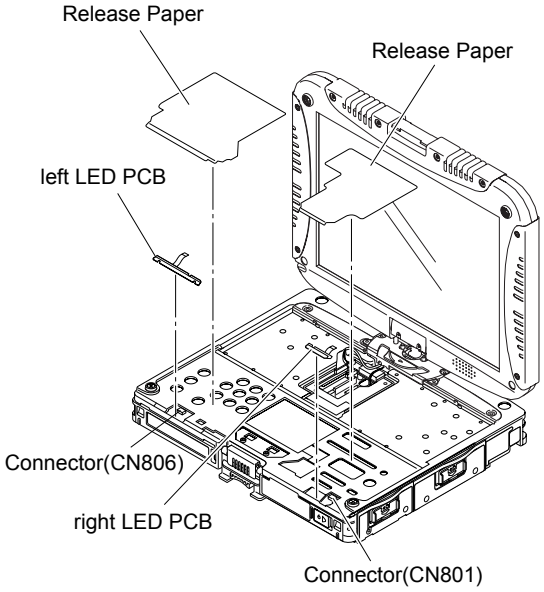

1. Remove the two Release Papers.
2. Disconnect the Cable from the Connector (CN806).
3. Remove the left LED PCB.
4. Disconnect the Cable from the Connector (CN801).
5. Remove the right LED PCB.

Downloaded from www.Manualslib.com manuals search engine

9.1.13. Removing Pad PCB and SW PCB

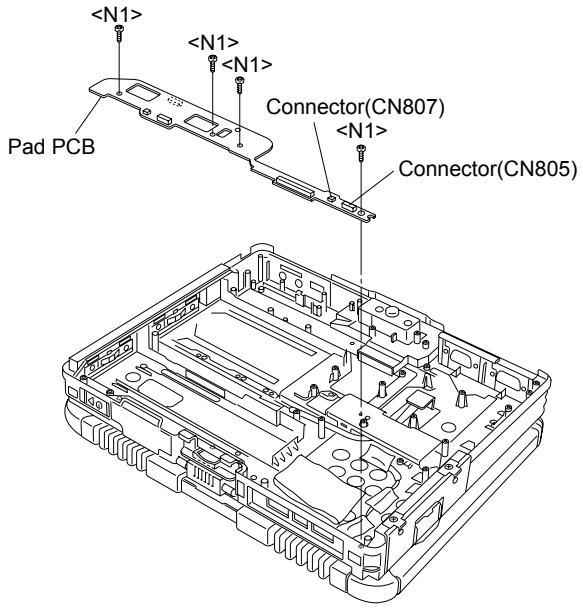

1. Disconnect the 2 Cables from the 2 Connectors (CN805,CN807).
2. Remove the 4 Screws <N1>.
3. Remove the Pad PCB.

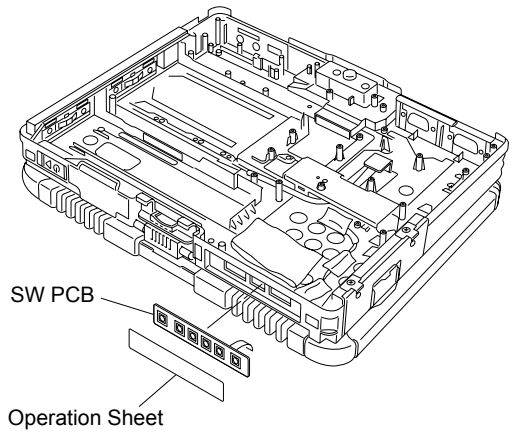

4. Remove the Operation Sheet and the SW PCB.

Screws <N1> : DFHE5025XA

9.1.14. Removing the Display unit

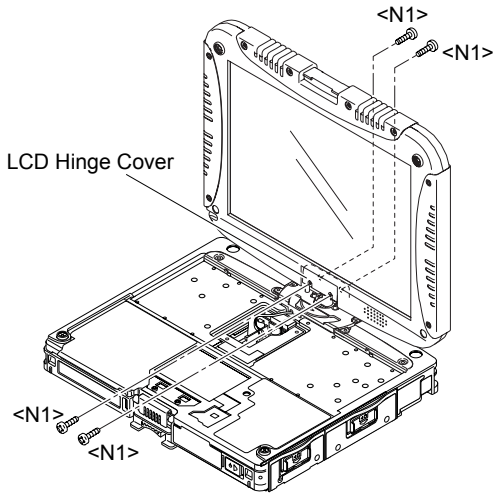

1. Remove the 4 Screws <N1>.
2. Remove the LCD Hinge Cover.

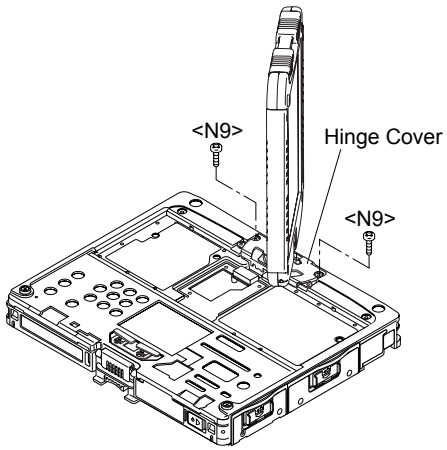

3. Display unit is half-rotated and removes the 2 Screws <N9>.

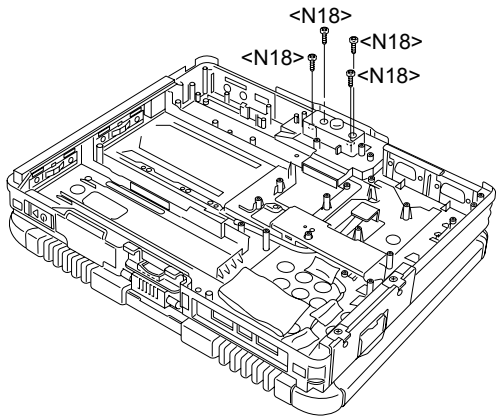

4. Remove the 4 Screws <N18>.
5. Turn the computer over.
6. Remove the Display Unit.

Screws <N1> : DFHE5025XA
Screws <N9> : DRSB2+5FKL
Screws <N18> : DXYN4+J7FNL

Downloaded from www.Manualslib.com manuals search engine

9.1.15. Removing the LCD Rear Case

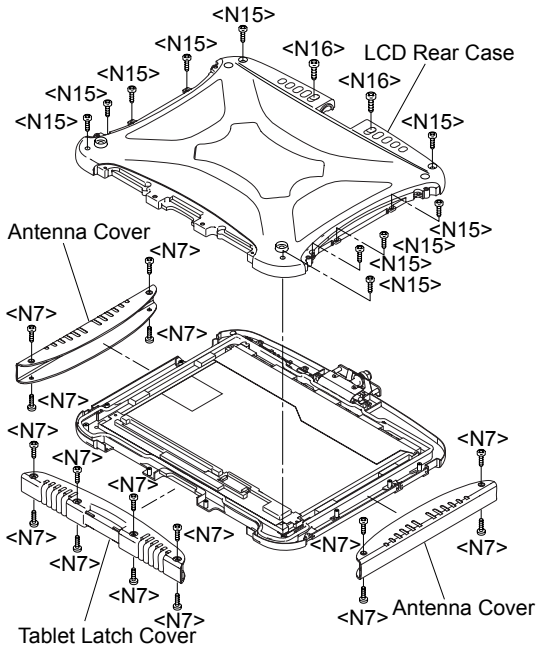

1. Remove the 8 Screws <N7> on the front side of Display unit.
2. Remove the 8 Screws <N7> on the back side of Display unit.
3. Remove 2 Antenna Covers and Tablet Latch Cover.
4. Remove the 10 Screws <N15>.
5. Remove the 2 Screws <N16>.
6. Remove the LCD Rear Case.

Screws <N7> : DRQT26+E5FKL
Screws <N15> : DXYN2+J6FNL
Screws <N16> : DXYN3+J10FNL

9.1.16. Removing the LCD Hinge

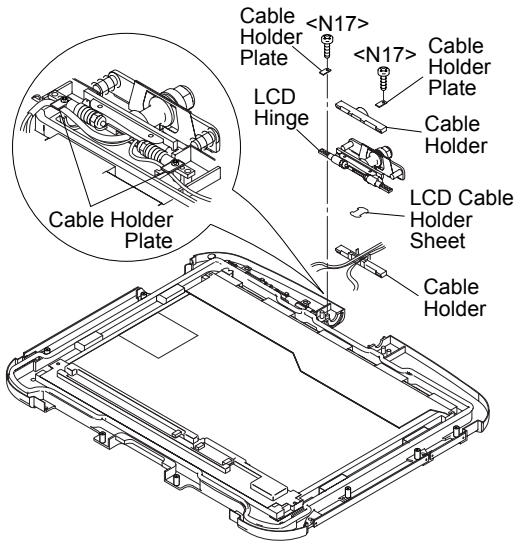

1. Remove the Cable Holder.
2. Remove the 2 Screws <N17>.
3. Remove the Cable Holder Plate and LCD Hinge.

Screws <N17> : DXYN3+J8FNL

9.1.17. Removing Inverter PCB and LCD Unit

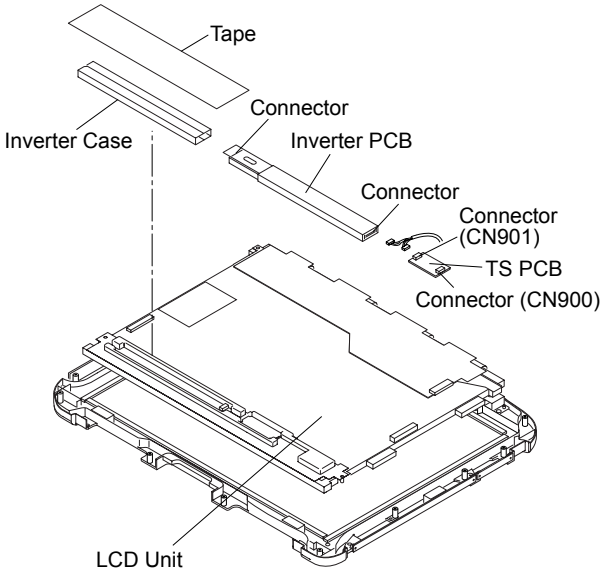

1. Disconnect the 2 Cables from 2 Connectors (CN1,CN2).
2. Remove the Inverter Case and Inverter PCB.
3. Disconnect the 2 Cable from 2 connector (CN900,CN901).
4. Remove the TS PS2 PCB, then remove the LCD unit.

9.1.18. Removing WWAN Main Antenna PCB, LAN-Main BT Antenna PCB, LAN AUX Antenna PCB and WWAN AUX Antenna PCB

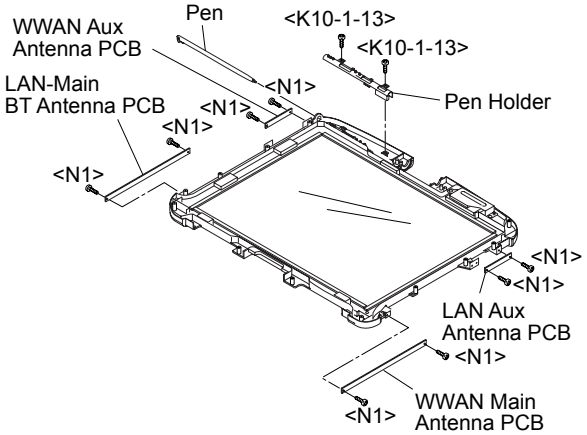

1. Remove the 2 Screws <N1>.
2. Remove the WWAN Main Antenna PCB.
3. Remove the 2 Screws <N1>.
4. Remove the LAN-Main BT Antenna PCB.
5. Remove the 2 Screws <N1>.
6. Remove the LAN AUX Antenna PCB.
7. Remove the 2 Screws <N1>.
8. Remove the WWAN AUX Antenna PCB.
9. Remove the Pen
10. Remove the two Screws <N6>.
11. Remove the Pen Holder.

Screws <N1> : DFHE5025XA
Screws <N6> : DRHM5025YA

Downloaded from www.Manualslib.com manuals search engine

9.1.19. Removing the Each Cover

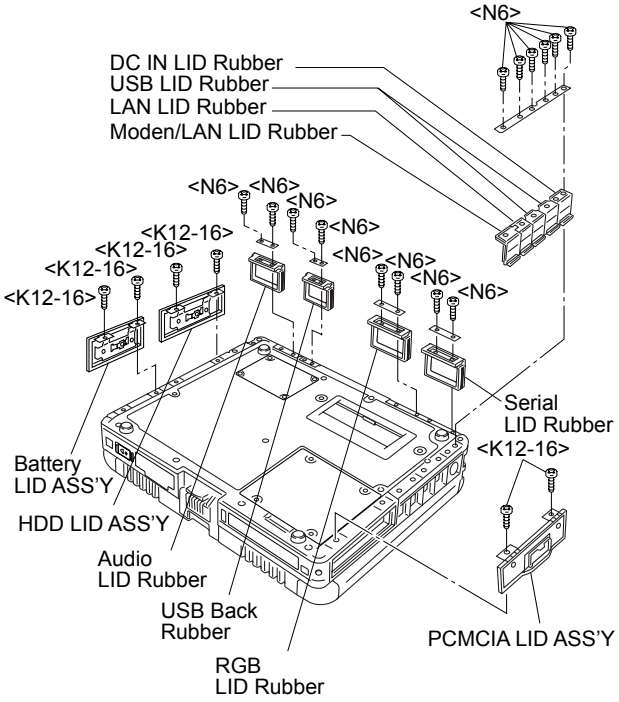

1. Remove the 14 Screws <N6>.
2. Remove the Modem/LAN LID Rubber, LAN LID Rubber, USB
   LID Rubber, DC IN LID Rubber, Serial LID Rubber, RGB LID Rubber, Audio LID Rubber and USB Back Rubber.
3. Remove the Rear Cabinet.
   (Refer to 7.1.5 Removing the Rear Cabinet)
4. Remove the 6 Screws <K12-16>.
5. Remove the Battery LID ASS'Y, HDD LID Ass'y and PCMCIA LID Ass'y.

Screws <K12-16> : DRQT26+D3FKL
Screws <N6> : DRHM5025YA

Downloaded from www.Manualslib.com manuals search engine

9.2. Reassembly Instructions

9.2.1. Attention when CF-19 series is repaired

- Please execute writing BIOS ID when you exchange the Main Board.
- Parts (Sheet and rubber) etc. related various the Conductive Cloth and Heat Spreader cannot be recycled. Use new parts.

9.2.2. Setting up the Inverter Ass'y and LCD UNIT

1. Set the LCD UNIT to the LCD Front Cabinet/TS Panel.
2. Set the TS PCB on the LCD Back Damper, and connect the 2 Cables to the Connectors (CN900 and CN901).
3. Set the Inverter PCB to the LCD Back Damper, and connect the 2 Cables to the Connectors.

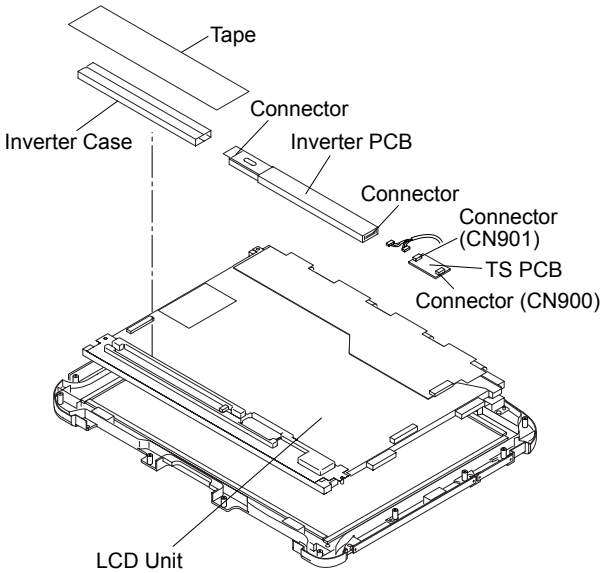

■ **Assembly of LCD Back Damper (Applicable Model : Touch Screen Model)**

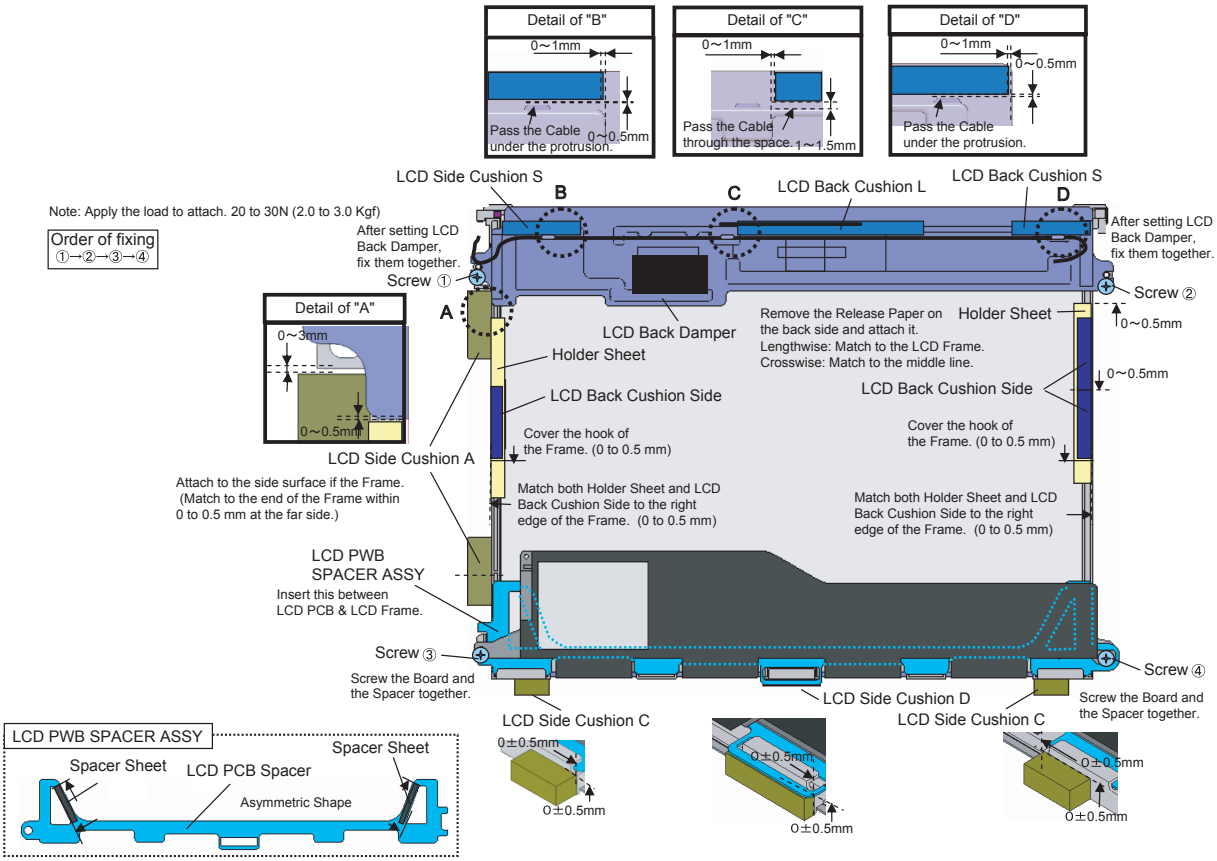

Downloaded from www.Manualslib.com manuals search engine

■ Assembly of LCD Back Damper (Application Model : Digitizer Model)

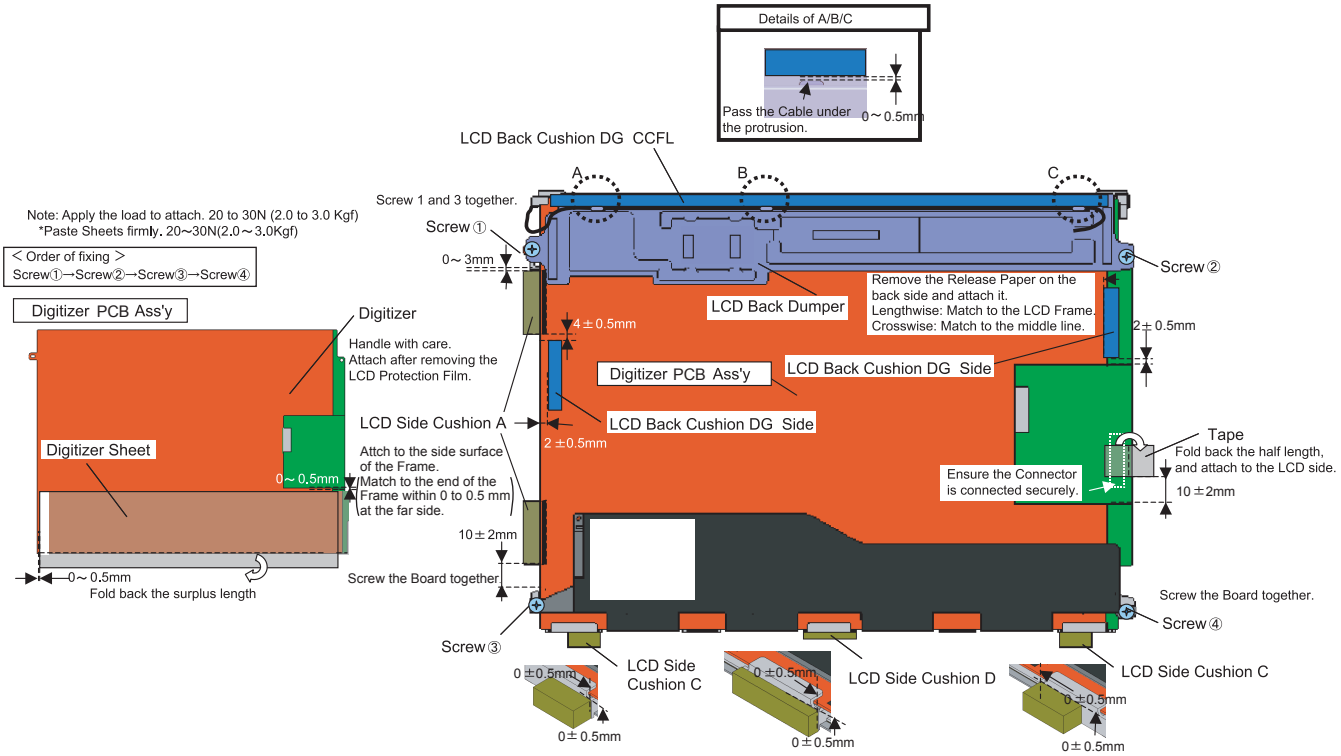

■ Assembly of Inverter PCB

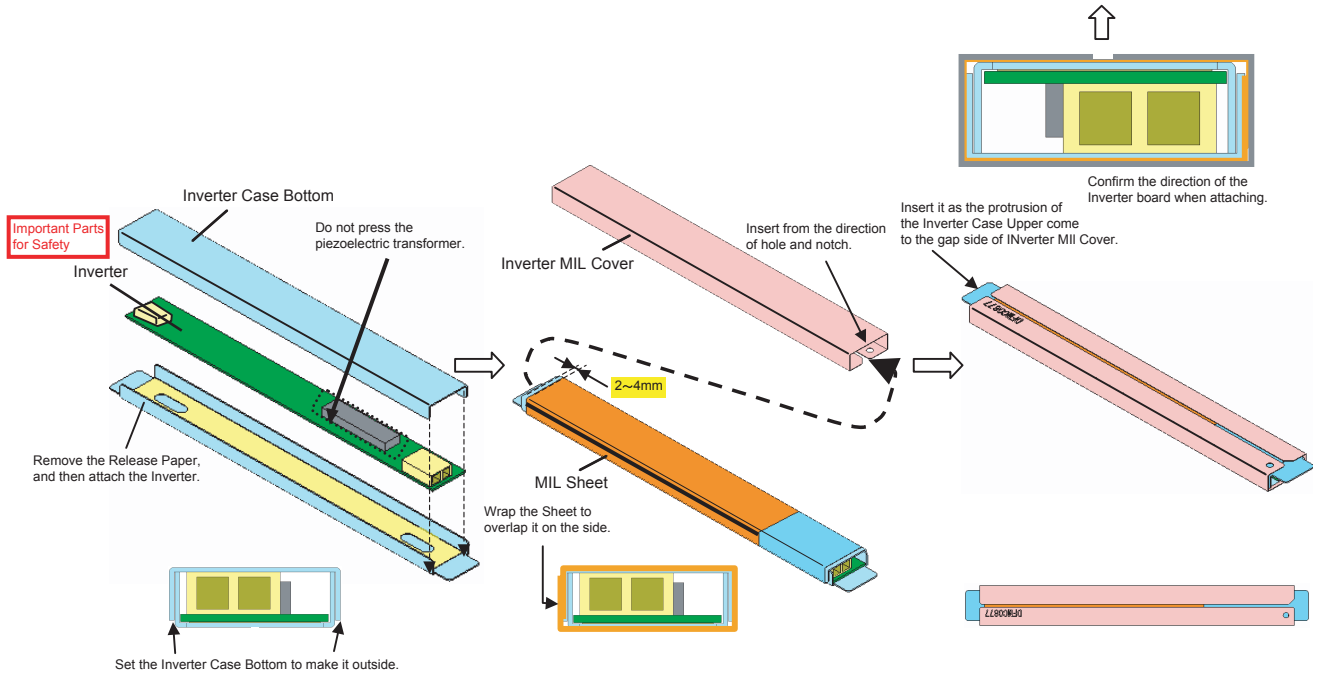

Downloaded from www.Manualslib.com manuals search engine

■ Assembly of Inverter PCB (Applicable Model : Touch Screen Model)

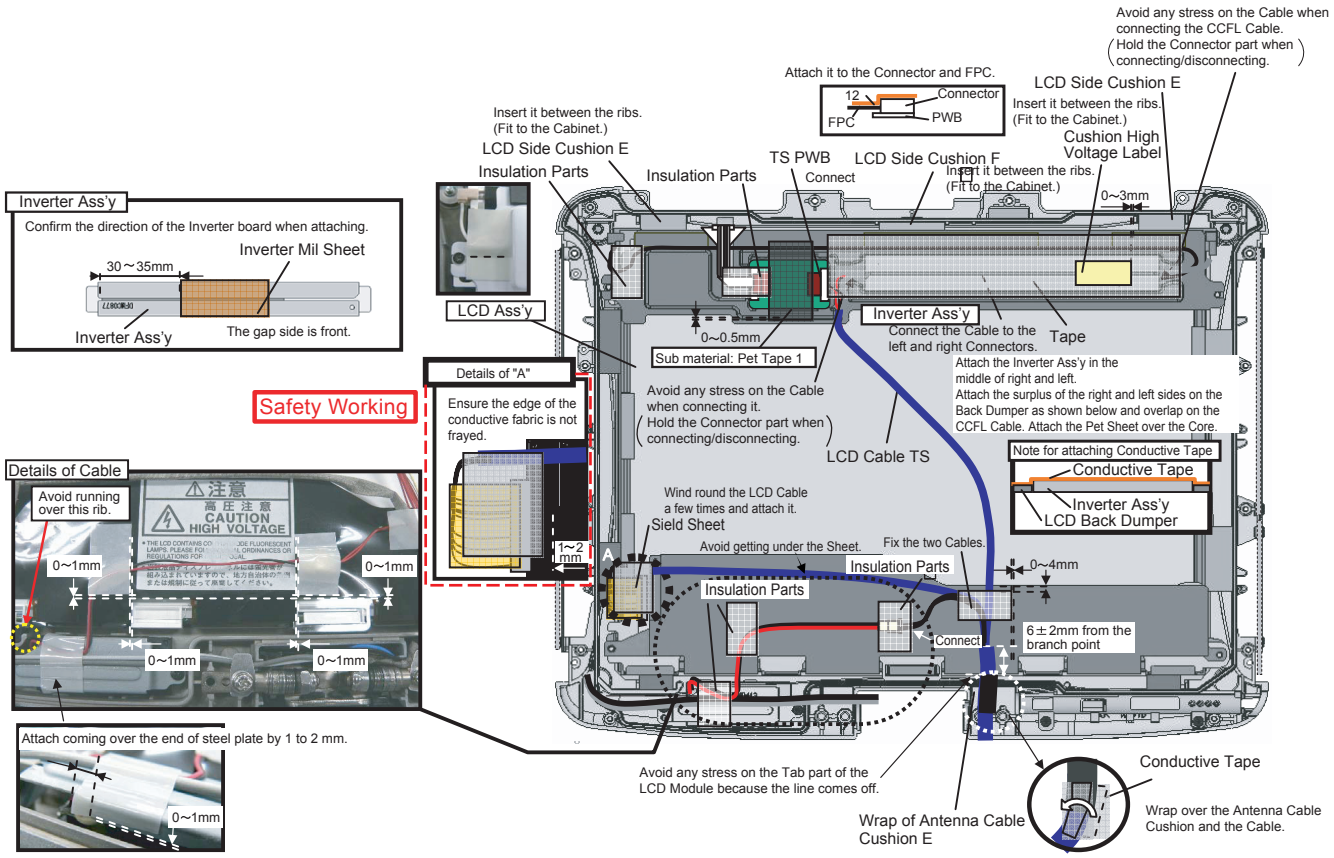

Downloaded from www.Manualslib.com manuals search engine

■ Assembly of Inverter PCB (Application Model : Digitizer Model)

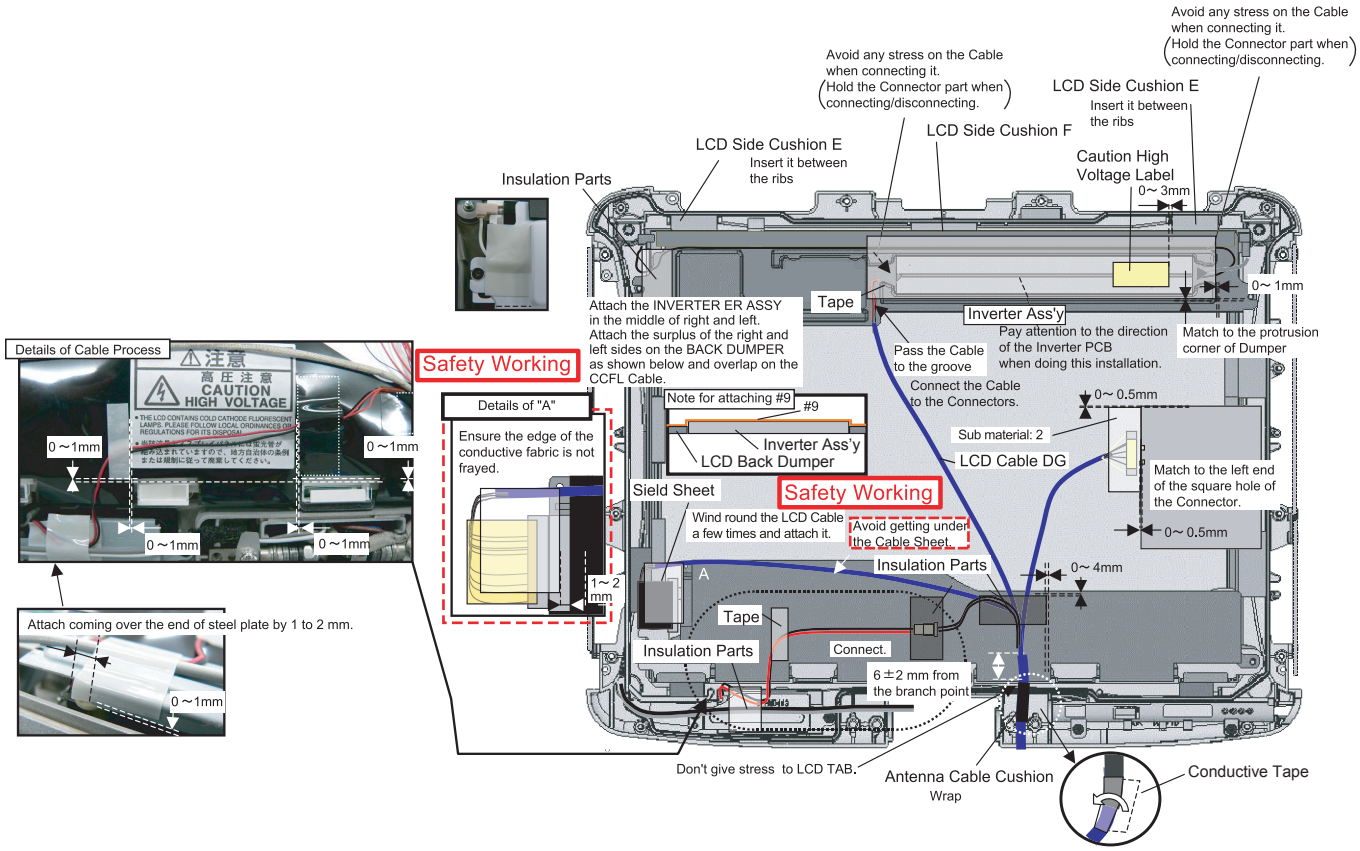

■ Assembly of Touch Screen (Applicable Model : Touch Screen Model)

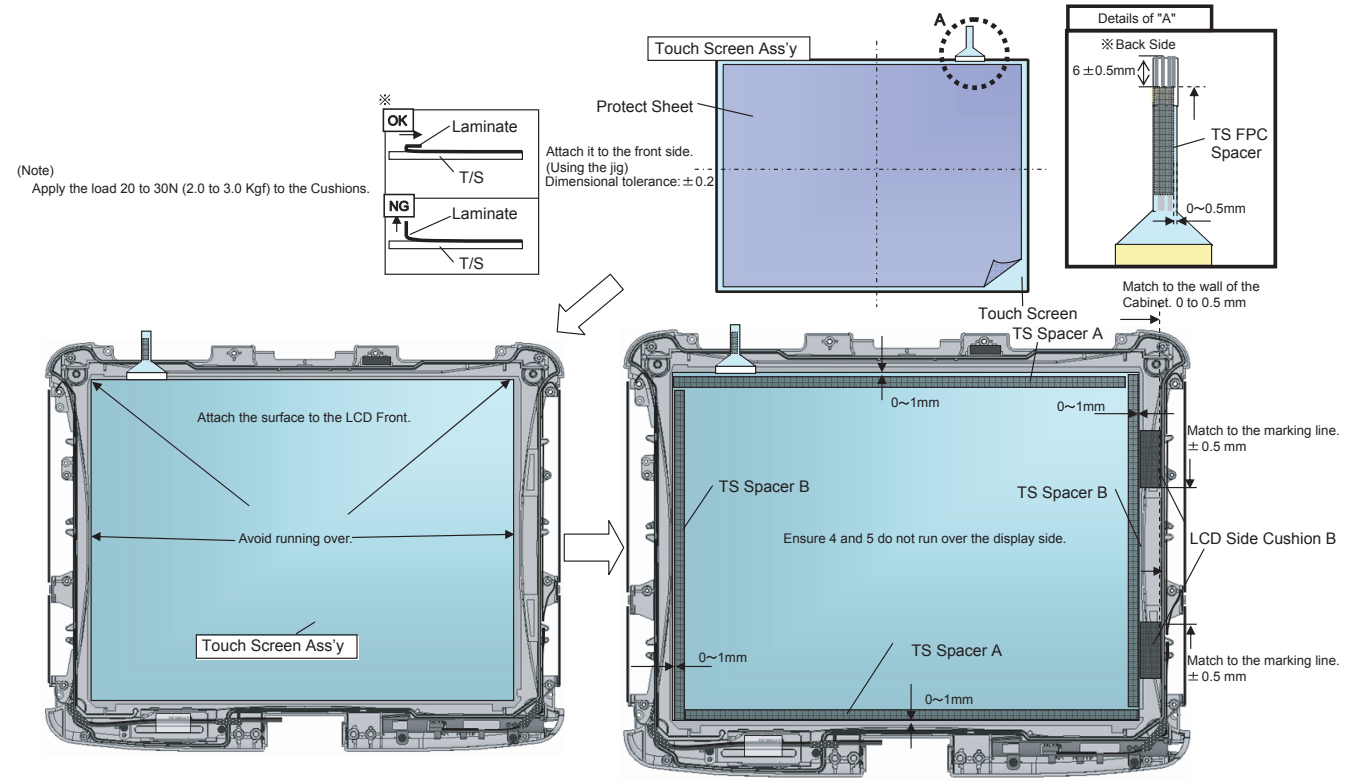

Downloaded from www.Manualslib.com manuals search engine

■ **Assembly of Glass (Applicable Model : Digitizer Model)**

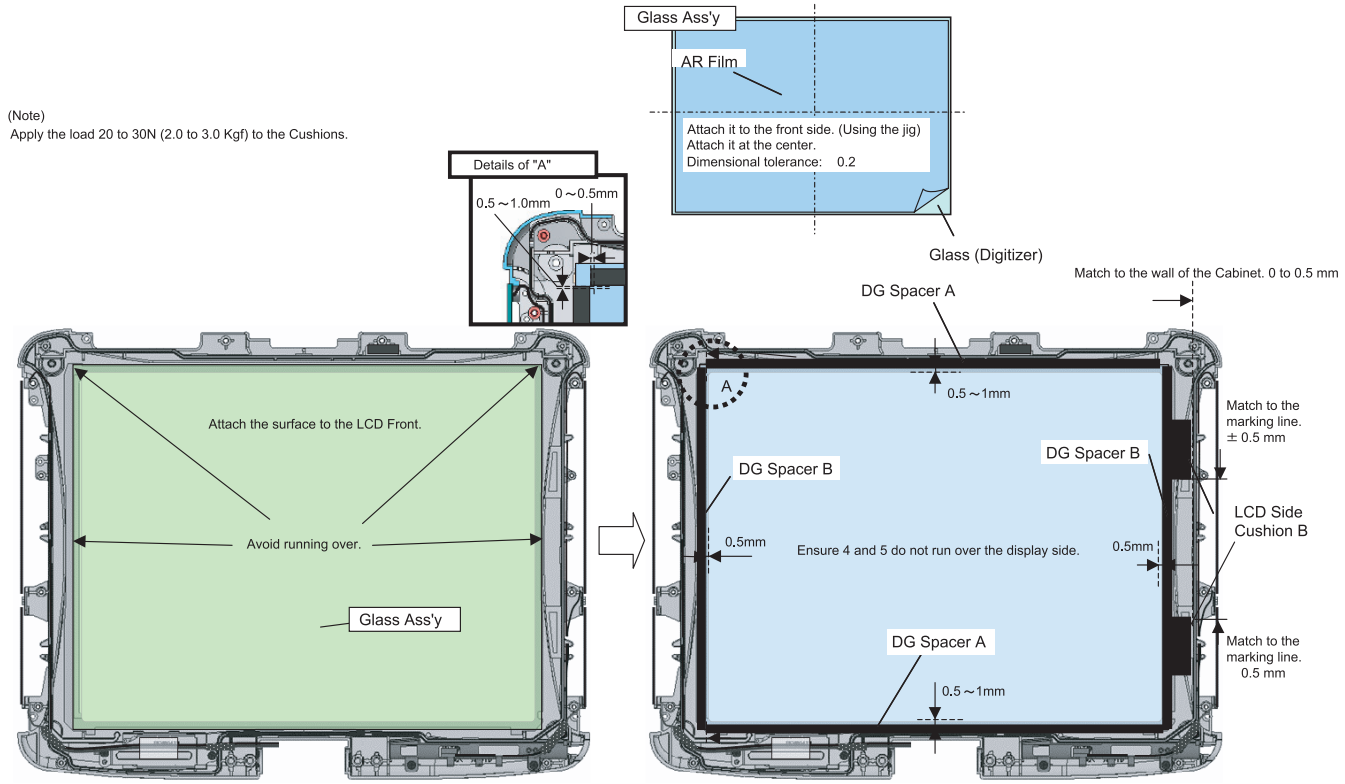

9.2.3. Assembling the WWAN Main Antenna PCB, LAN-Main BT Antenna PCB, LAN AUX Antenna PCB, WWAN AUX Antenna PCB and Pen holder

1. Fix the Pen Holder using the 2 Screws. <K10-1-13>
2. Attach the Pen.
3. Fix the WWAN AUX Antenna PCB using the 2 Screws. <N1>
4. Fix the LAN AUX Antenna PCB using the 2 Screws. <N1>
5. Fix the LAN-Main BT Antenna PCB using the 2 Screws. <N1>
6. Fix the WWAN Main Antenna PCB using the 2 Screws. <N1>

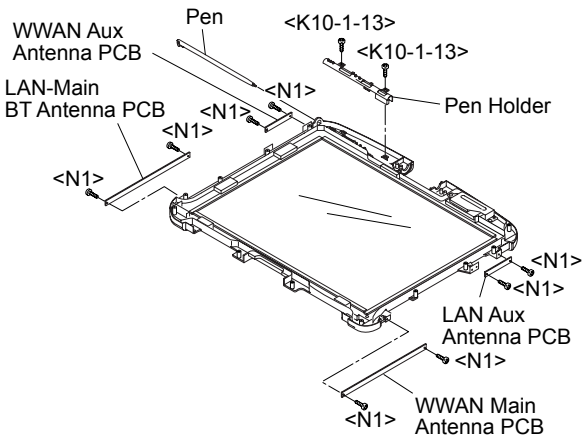

Screws <N1> : DFHE5025XA
Screws <K10-1-13> : DRHM5025YAT

Downloaded from www.Manualslib.com manuals search engine

■ **Line Processing of Antenna Cable**

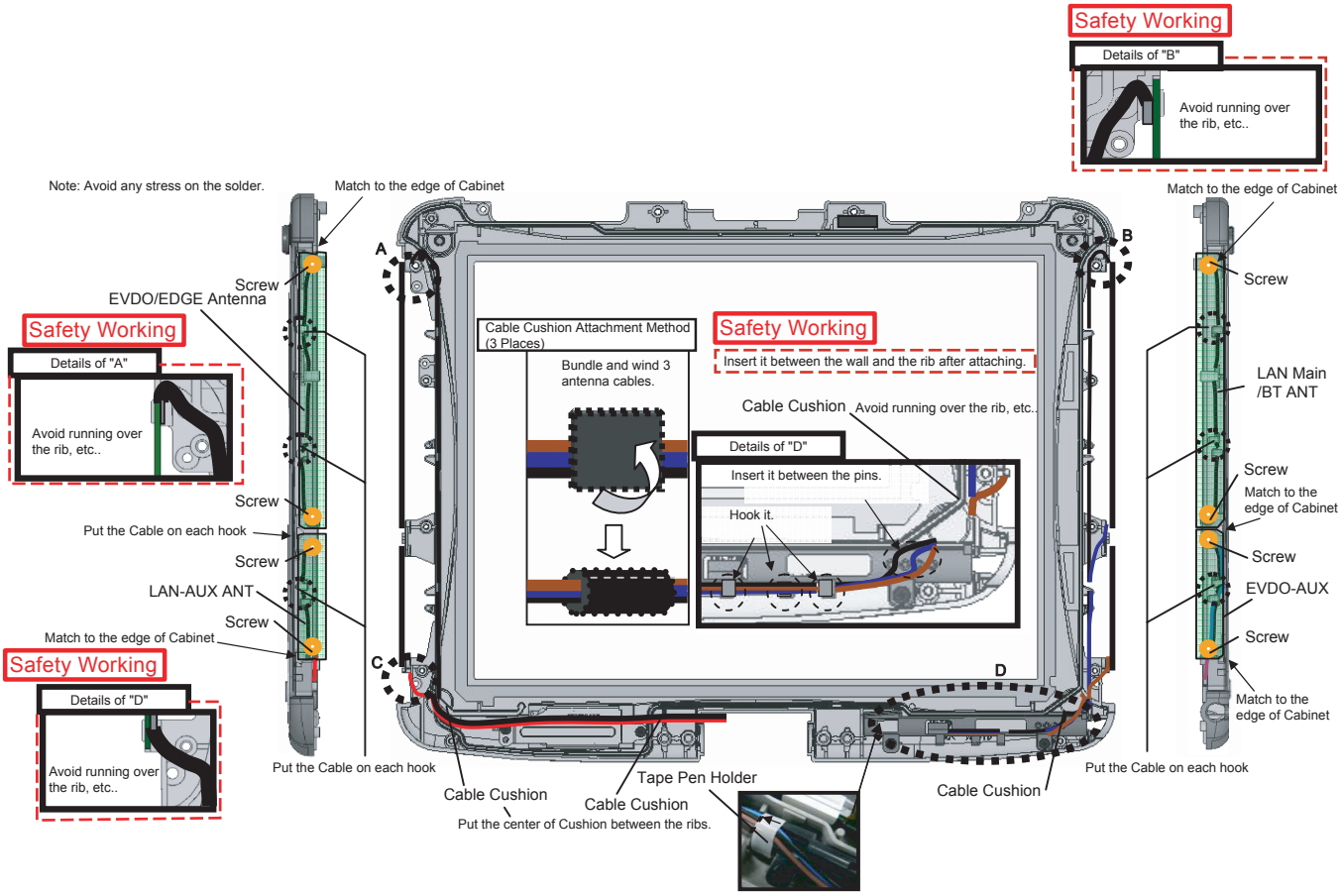

9.2.4. Setting up the LCD Hinge

1. Wind the Cable coming out of the LCD Unit counterclockwise to the LCD Hinge.
2. Set the Lock Plate and the Hinge Top Cover, and rotate the LCD Hinge to turn the Display Unit to front
3. Put the LCD Cable and the Antenna Cable in the Cable Holder.
4. Fit another Cable Holder and clamp the Cable Holders in the LCD Hinge.
5. Fix the LCD Hinge using the 2 Screws <N17> and the 2 Cable Holder Plates.

Screws <N17 > : DXYN3+J8FNL

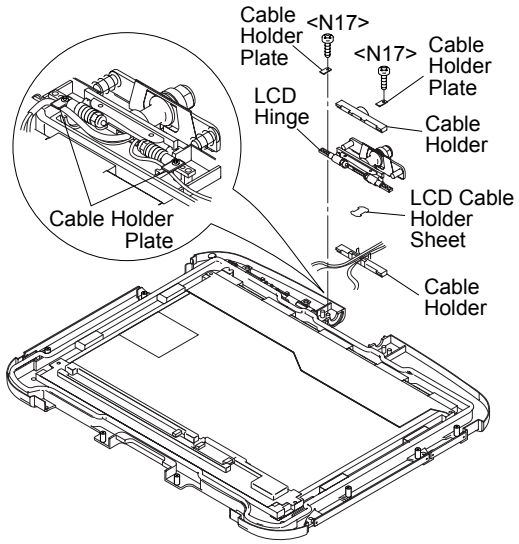

Downloaded from www.Manualslib.com manuals search engine

■ Assembly of LCD Hinge

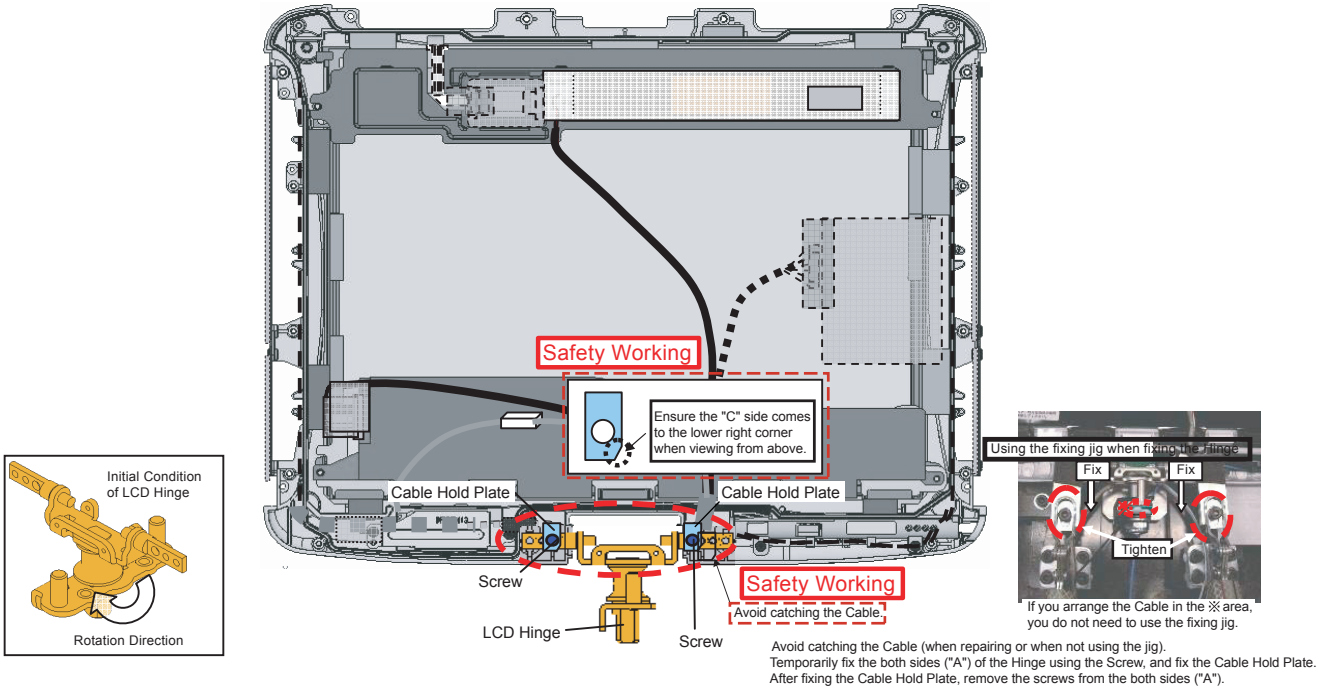

■ Line Processing of Antenna Cable and LCD Cable

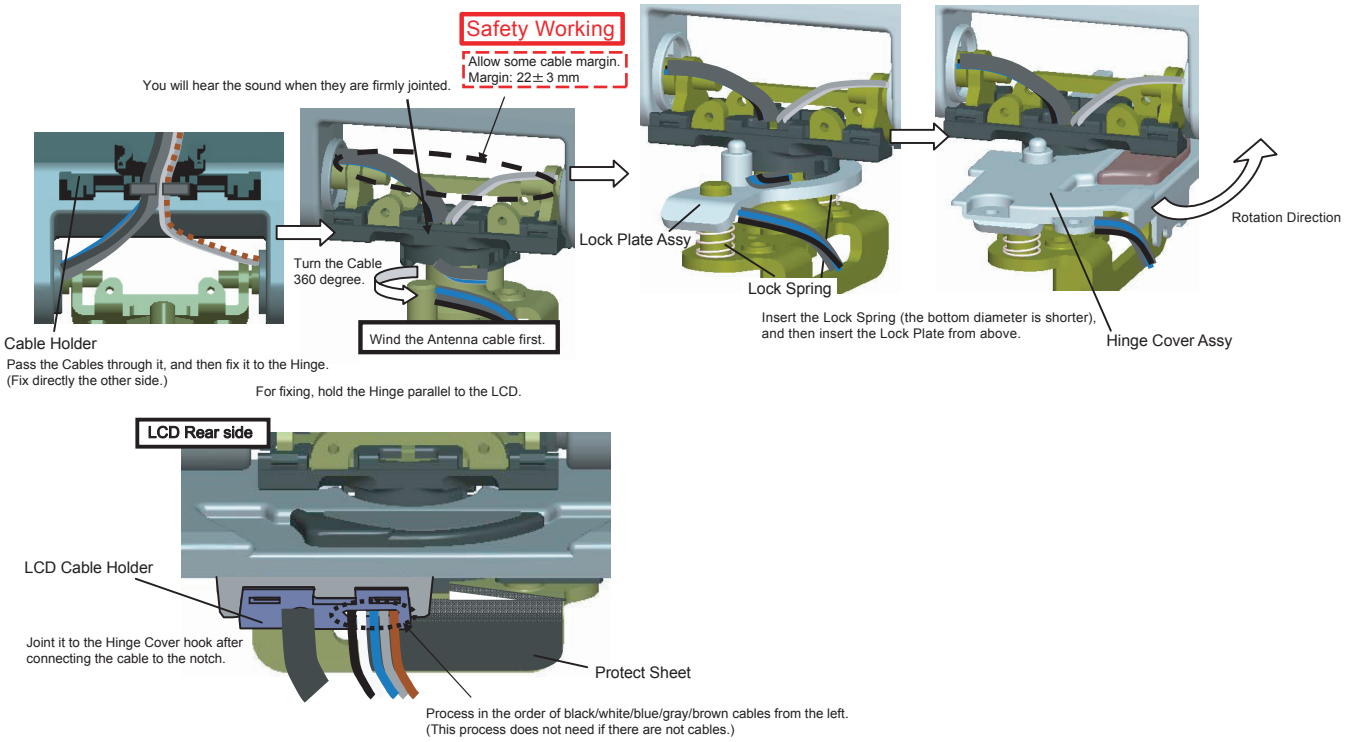

Downloaded from www.Manualslib.com manuals search engine

9.2.5. Assembling the Antenna Cover, the Tablet Latch Cover and the LCD Rear Case

1. Fix the LCD Rear Case using the 10 Screws <N15> and the 2 Screws. <N16>
2. Attach the Antenna Covers and the Tablet Latch Cover to the Display Unit.
3. Tighten the 8 Screws <N7> on the back of the Display Unit.
4. Turn the Display Unit over, and tighten the 8 Screws. <N7>

Screws <N7> : DRQT26+E5FKL
Screws <N15> : DXYN2+J6FNL
Screws <N16> : DXYN3+J10FNL

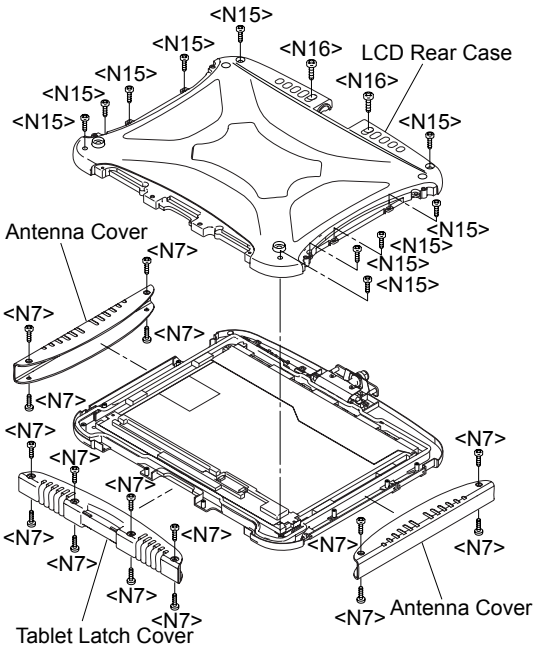

■ Assembly of LCD Front Case

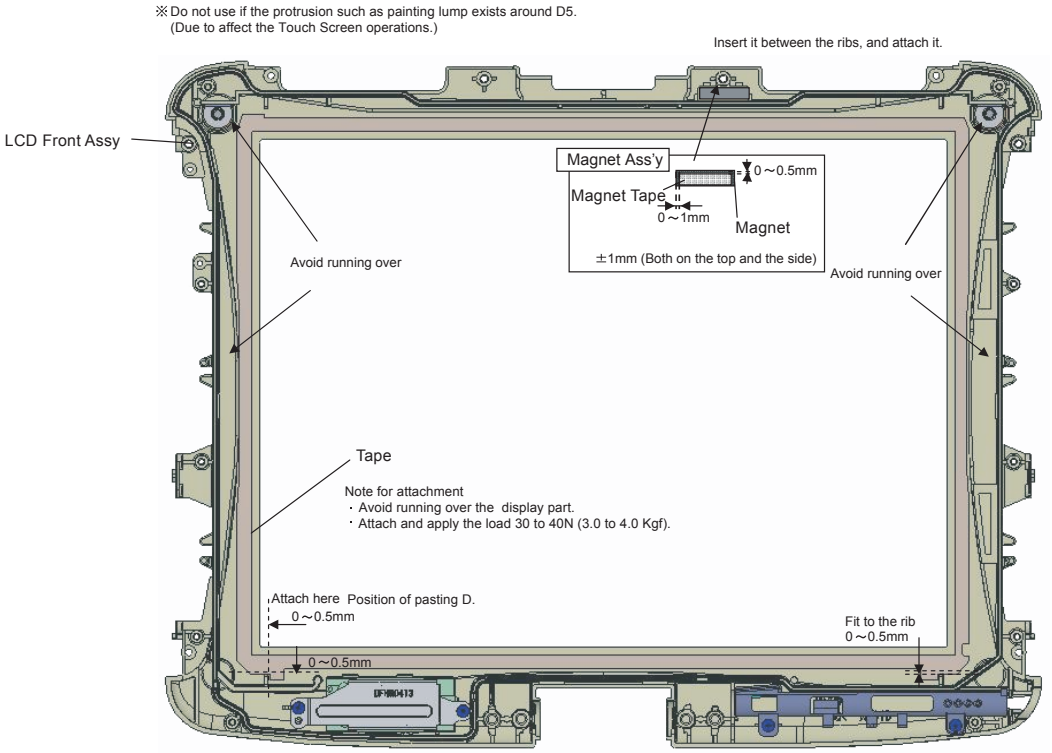

Downloaded from www.Manualslib.com manuals search engine

■ Assembly of LCD Rear Case (Applicable Model : Touch Screen Model)

(Note)
- Arrow without specified measurement: 0 to 0.5 mm
- Allowable right/left displacement of the Cushion: max. 0.5 mm
- Attach and apply the load 30 to 40N (3.0 to 4.0 Kgf).

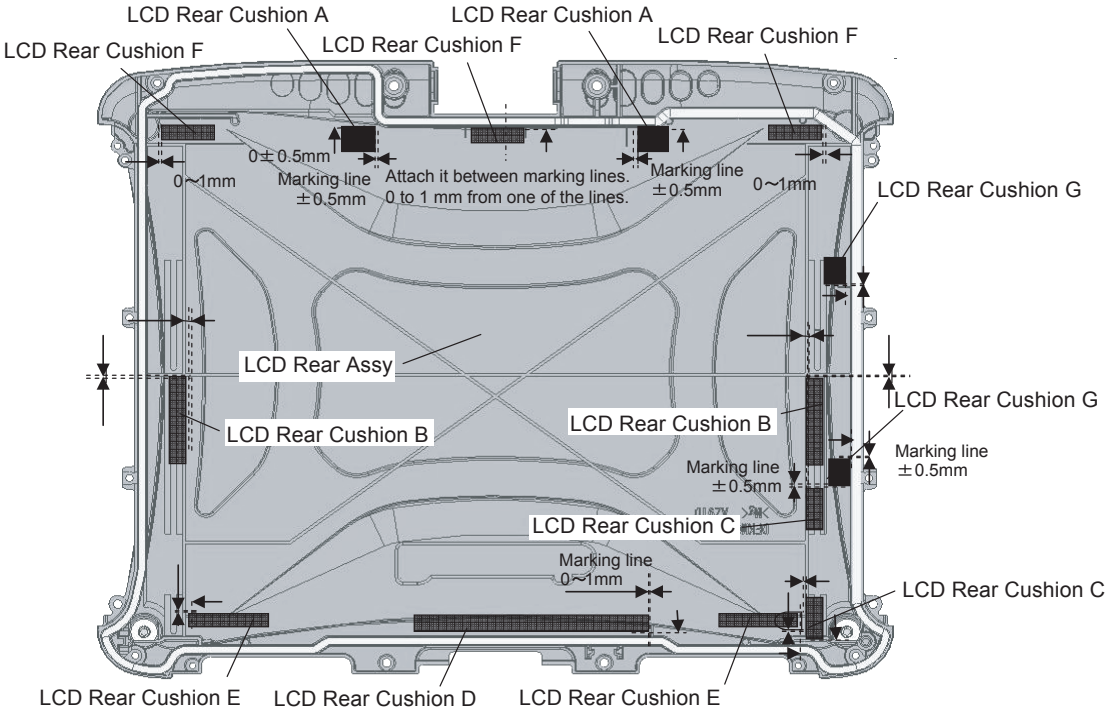

■ Assembly of LCD Rear Case (Applicable Model : Digitizer Model)

(Note)
- Arrow without specified measurement: 0 to 0.5 mm
- Allowable right/left displacement of the Cushion: max. 0.5 mm
- Attach and apply the load 30 to 40N (3.0 to 4.0 Kgf).

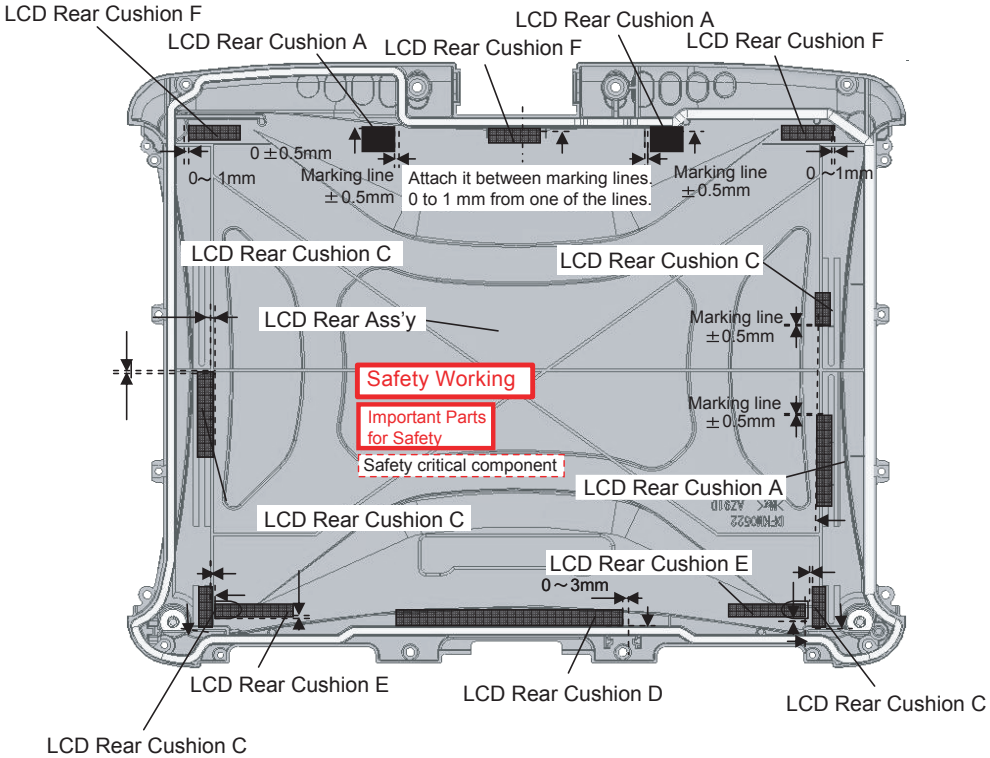

Downloaded from www.Manualslib.com manuals search engine

■ Assembly of Tablet Latch Cover and Antenna Cover

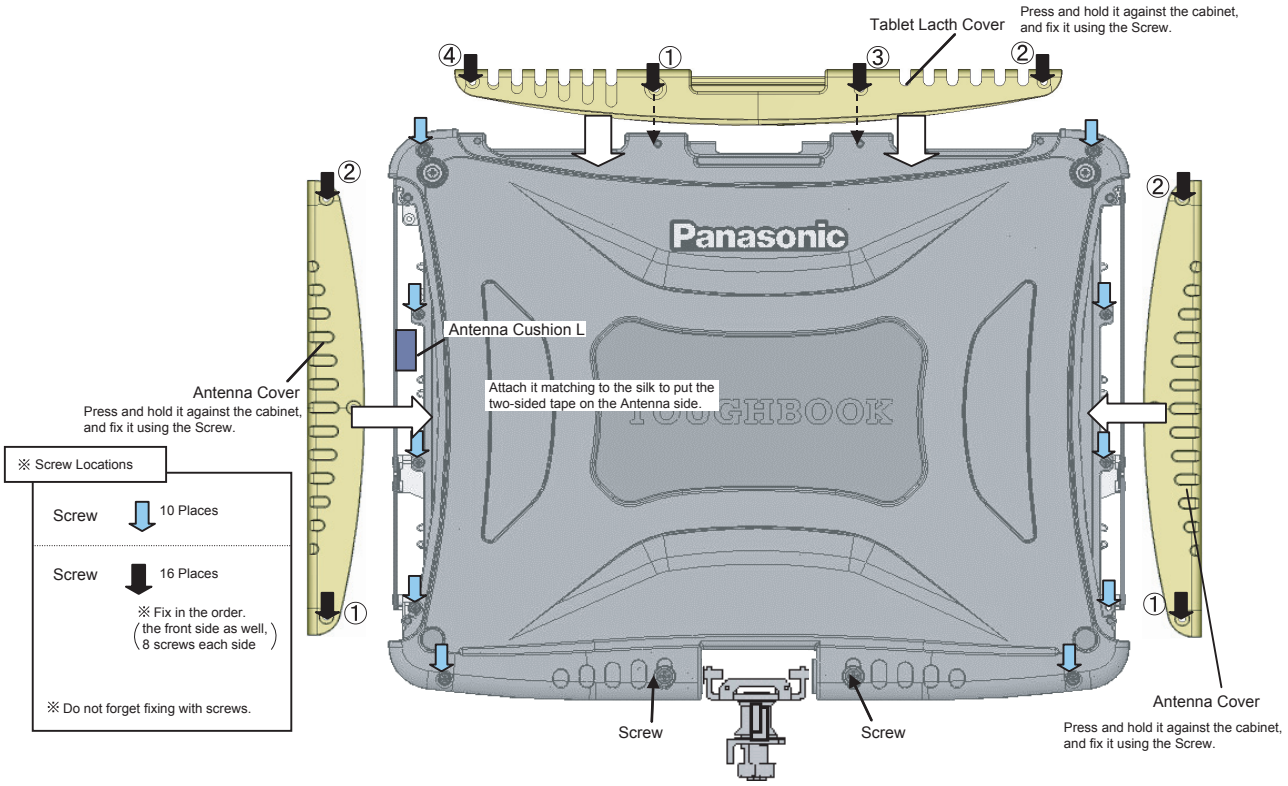

Downloaded from www.Manualslib.com manuals search engine

9.2.6. Setting the Display Unit

1. Fix the Display Unit using the 2 Screws <N9>.
2. Close the Display Unit and turn the computer over, then fix the Display Unit using the 4 Screws <N18>.

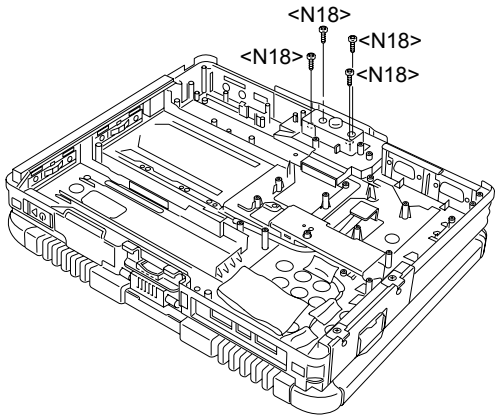

3. Turn the computer over and fix the LCD Hinge Cover using the 2 Screws <N1>.

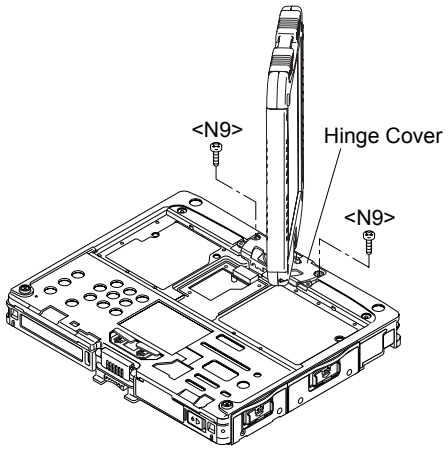

4. Open the Display Unit and fix the LCD Hinge Cover using the 2 Screws <N1>.

Screws <N1> : DFHE5025XA
Screws <N9> : DRSB2+5FKL
Screws <N18> : XYN4+J7FNL

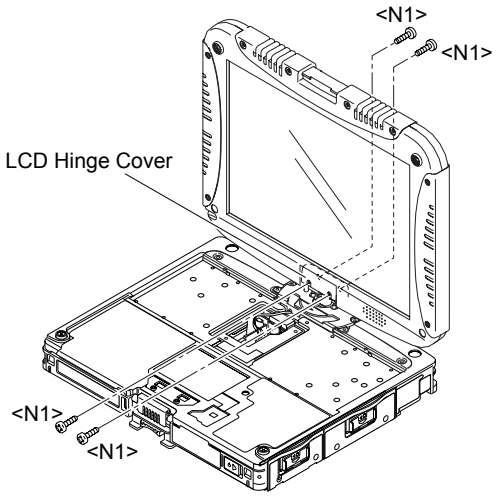

Downloaded from www.Manualslib.com manuals search engine

■ Assembly of Display Unit

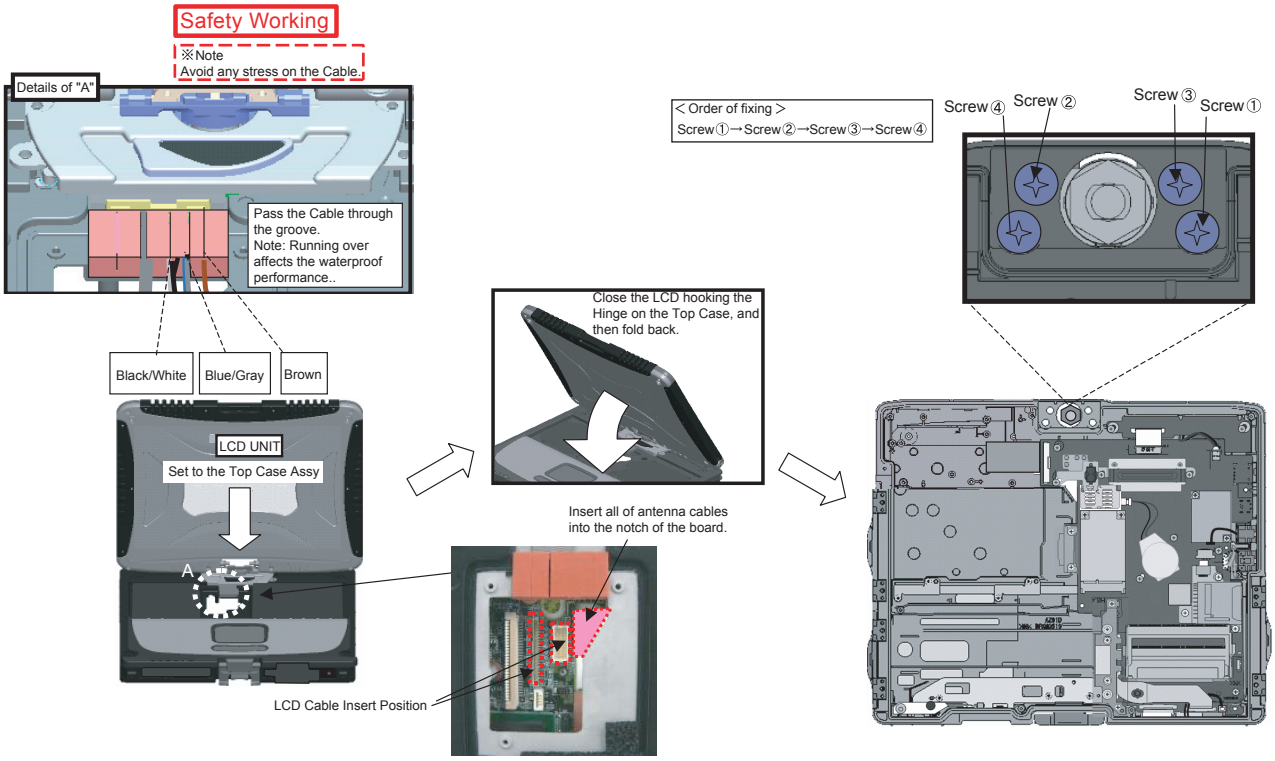

Downloaded from www.Manualslib.com manuals search engine

9.2.7. Setting the Pad PCB and SW PCB

1. Attach both the SW PCB and the Operation Sheet to the Cabinet.

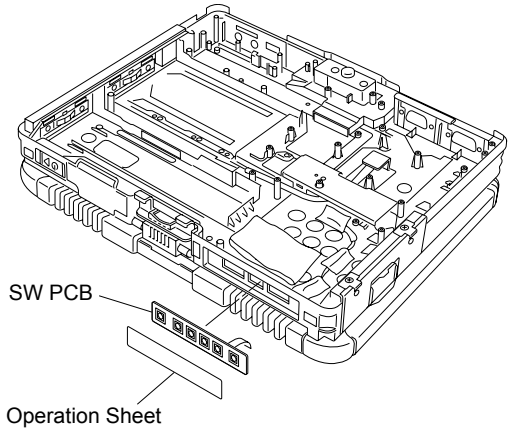

2. Connect the 3 Cables to the 3 Connectors. (CN800,CN805,CN807)
3. Fix the Pad PCB using the 4 Screws. <N1>

   Note:

   Tighten the Screws in the numbered order (No1 to No4).

Screws <N1> : DFHE5025XA

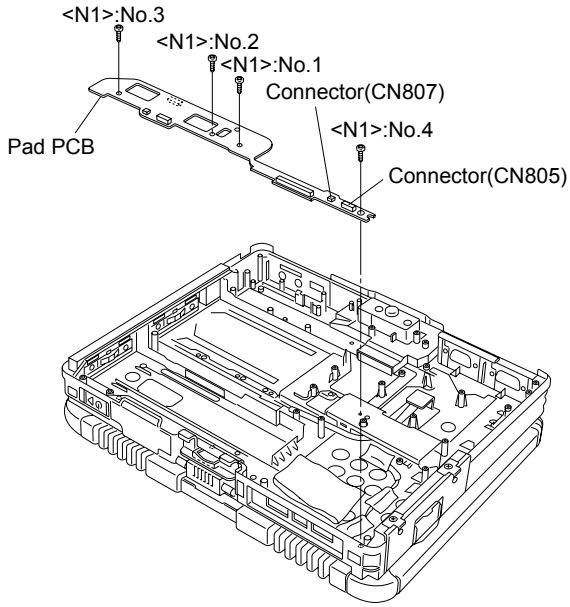

Downloaded from www.Manualslib.com manuals search engine

■ **Assembly of the Pad PCB and SW PCB**

(Note) ▪ Arrow without specified measurement: 0 to 0.5 mm

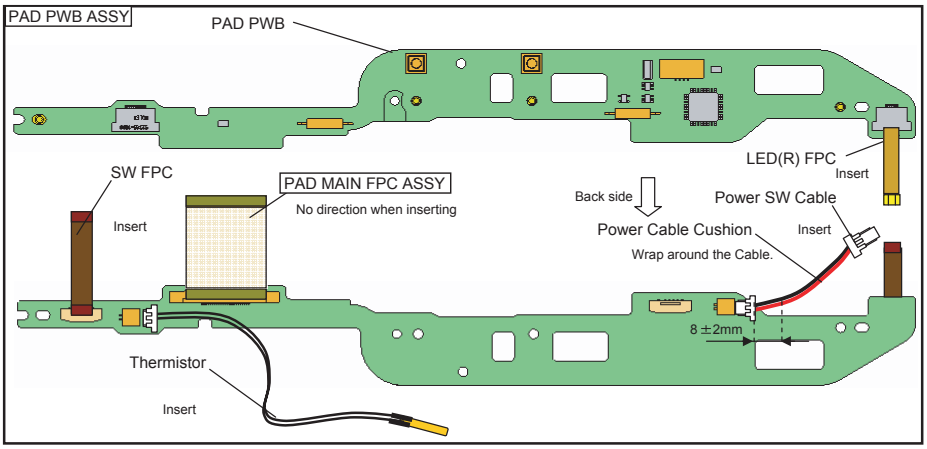

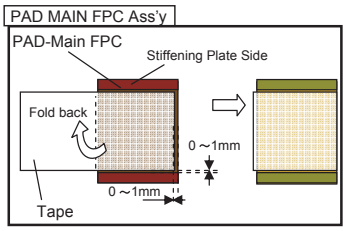

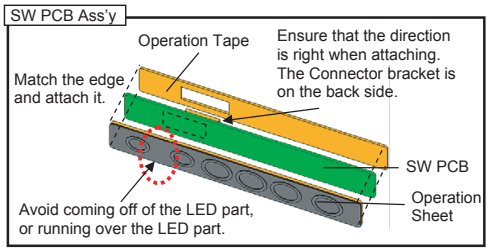

■ **Putting of the TP Bottom Tape**

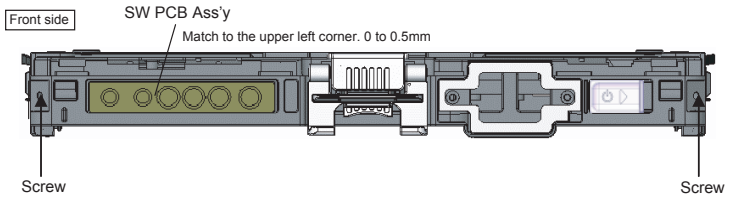

9.2.8. Setting the left LED PCB and right LED PCB

1. Connect the Cable to the Connector. (CN806)
2. Fix the left LED PCB.
3. Connect the Cable to the Connector. (CN801)
4. Fix the right LED PCB.
5. Attach the two Release Papers.
6. Attach the Palm Rest Ass'y.

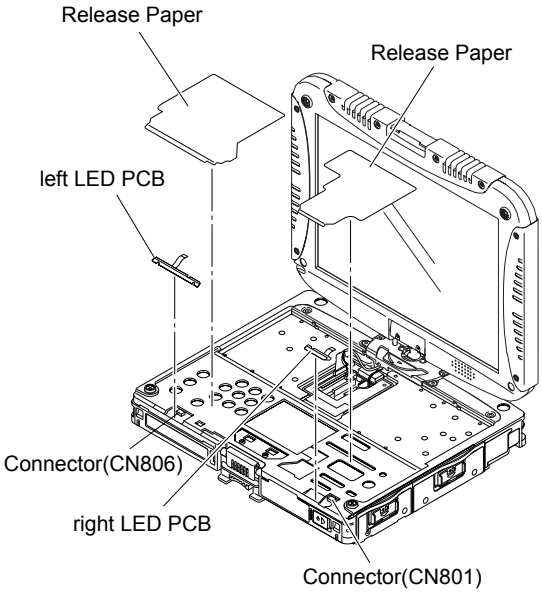

Downloaded from www.Manualslib.com manuals search engine

■ **Assembly of the left LED PCB and right LED PCB**

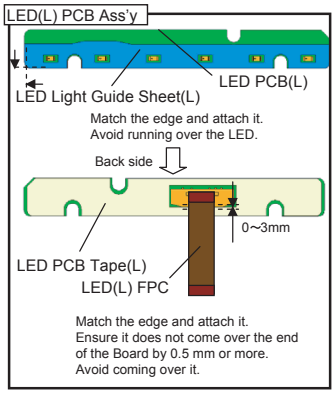

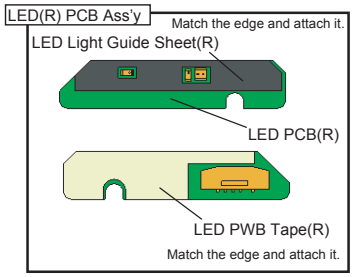

9.2.9. Setting the Power SW PCB

1. Connect the Cable to the Connector. (CN9)
2. Fix the Power SW PCB using the Screw. <N1>

Screws <N1> : DFHE5025XA

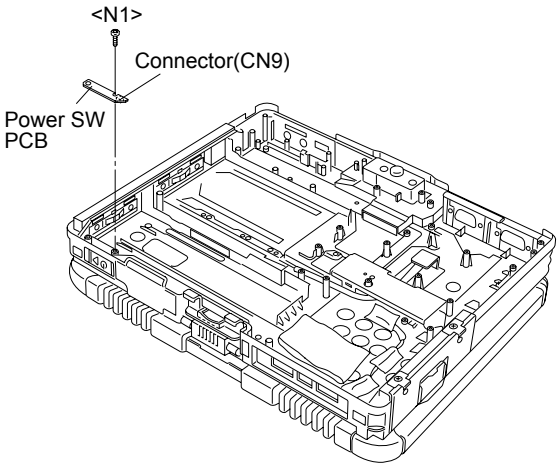

■ **Assembly of the Power SW PCB**

(Note) Arrow without specified measurement: 0 to 0.5 mm

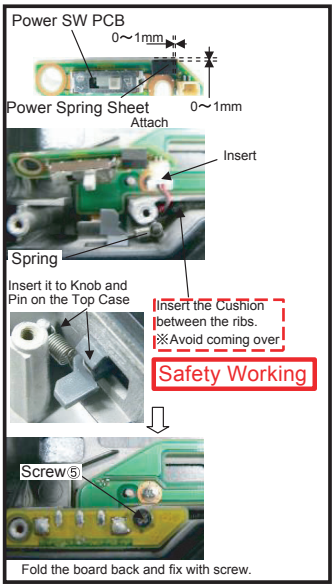

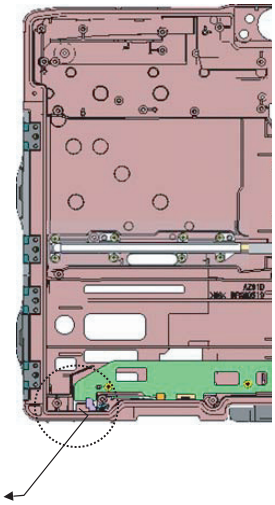

Downloaded from www.Manualslib.com manuals search engine

9.2.10. Setting the I/O PCB Ass'y

1. Fix the I/O PCB using the 2 Screws. <N9>
2. Fix the I/O PCB using the 4 Screws. <N2>

Screws<N2> : DFHE5058ZB
Screws<N9> : DRSB2+5FKL

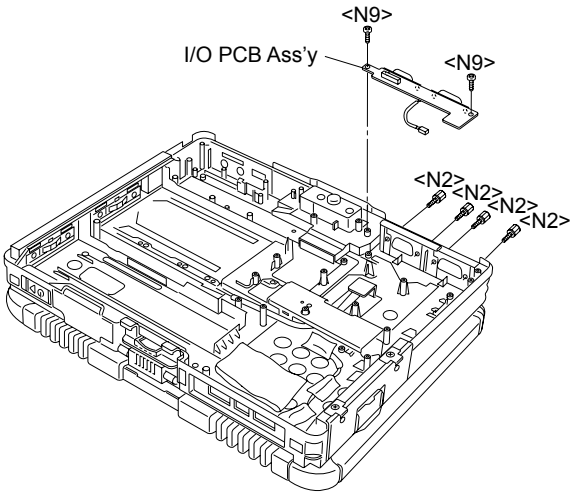

9.2.11. Setting the Main PCB, Wireless Module, SD PCB, DU PCB, Antenna PCB and Modem PCB

1. Fix the Main PCB using the 7 Screws <N9>.
2. Connect the 3 Cables to the 3 Connectors. (CN9,CN14,CN23)
3. Attach the Tape.

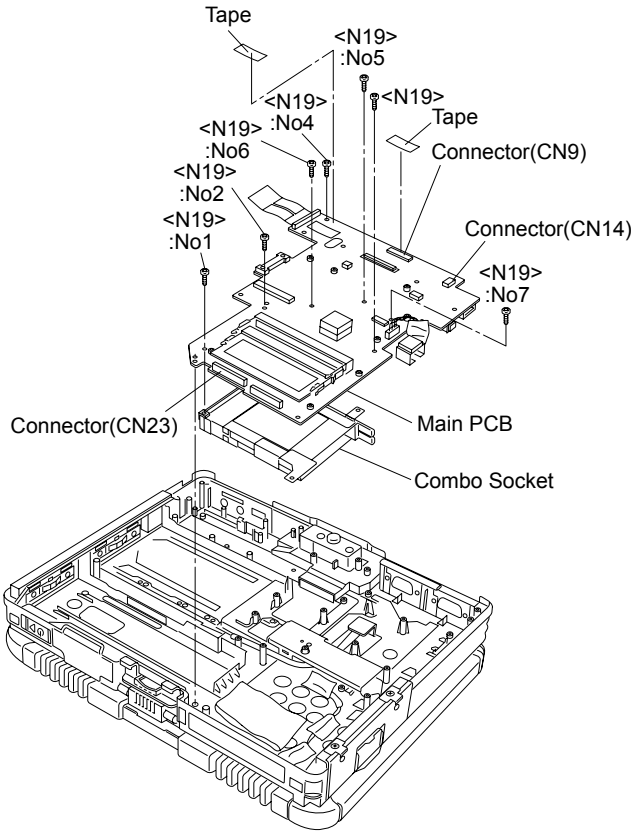

Downloaded from www.Manualslib.com manuals search engine

4. Fix the Modem PCB using the 2 Screws <N19>.
5. Fix the Wireless Module using the 2 Screws <N19>.
6. Fix the DIMM Holder using the 2 Screws <N19>.
7. Attach the Cable to the Connector (CN3) and attach the Coin Battery.

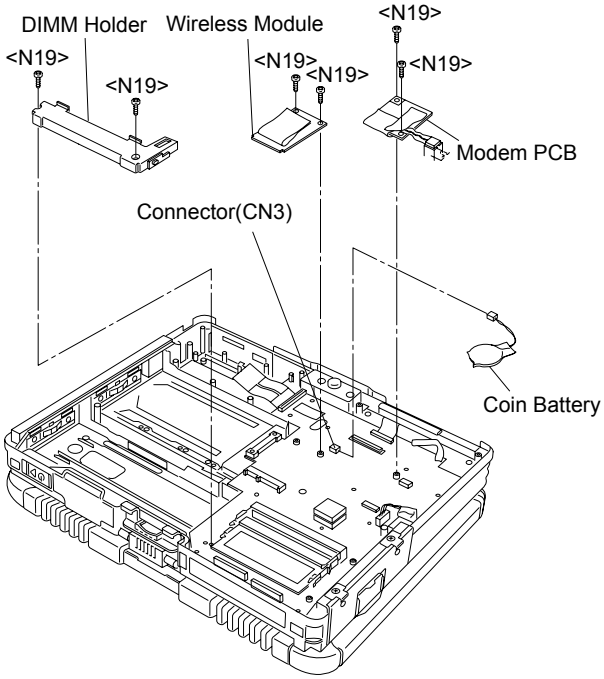

8. Fix the SD PCB Ass'y using the 3 Screws <N19>.
9. Attach the Cable to the Connector (CN21).
10. Hook the Flex Cable on the DIMM Holder, and turn 90 degrees.
11. Fix the BAT FPC Ass'y using the 2 Screws <N9>.
12. Connect the cable to the Connector. (CN15)
13. Fix the HDD Connector Guide using the 2 Screws <N8>.

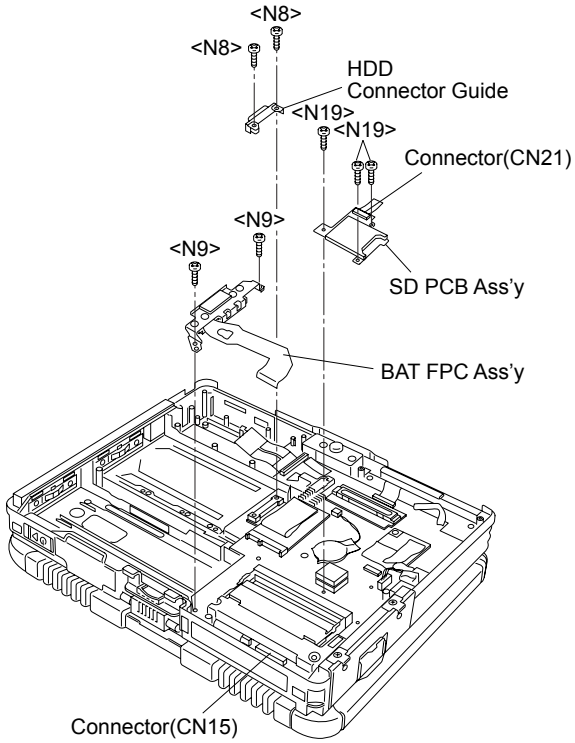

Downloaded from www.Manualslib.com manuals search engine

14. Fix the DU PCB and the Plate using the 2 screws <N3>.
15. Fix the DU PCB Ass'y and Antenna PCB using the 3 screws <N9> and the 2 screws <N3> .
16. Connect the white, black and gray Cables.

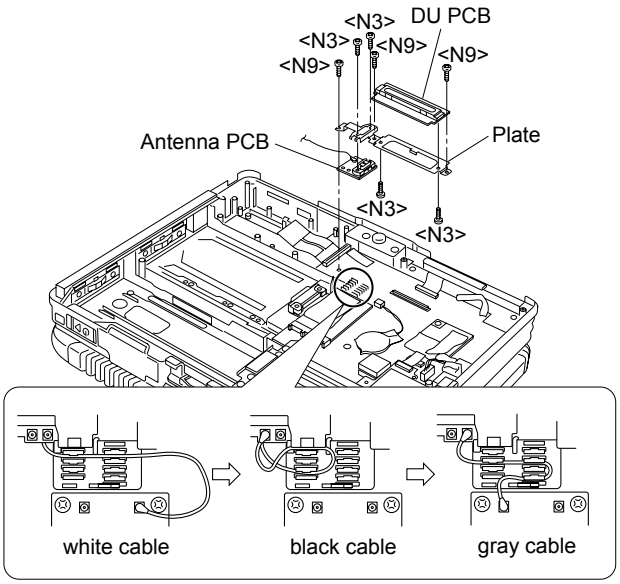

17. Turn the computer over, open the Display Unit, and then connect the 2 LCD Cables. (CN8,CN17)

Note:

Tighten the Screws in the numbered order (No1 to No7).

Screws <N3> : DFHE5108ZA
Screws <N8> : DRSB2+10FKL
Screws <N9> : DRSB2+5FKL
Screws <N19> : XSB2+3FNL

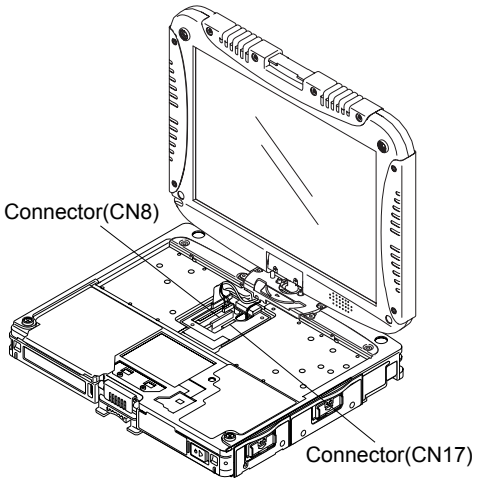

Downloaded from www.Manualslib.com manuals search engine

■ Assembly of Main PCB

Process in the order of 1→2→3→4.

①

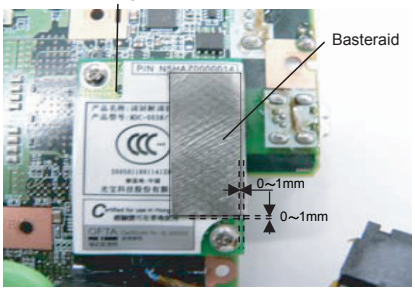

②

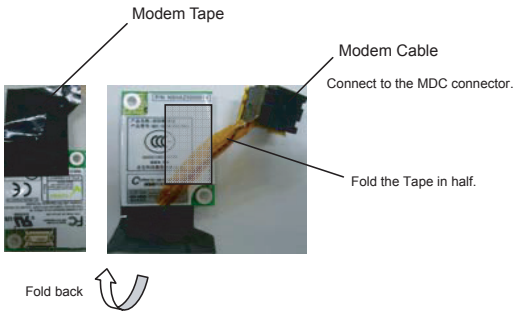

③

④

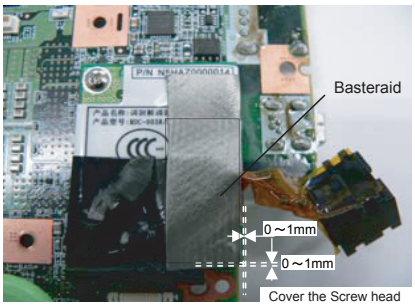

If one screw is supplied, insert into the DIMM lower slot.
If two screws are supplied, insert into the DIMM upper and lower slots.

MODEM PCB Set
Fix the Screw (#5) from the back side.

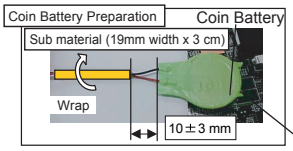

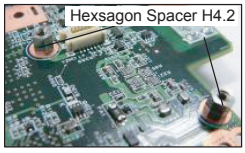

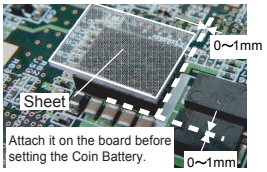

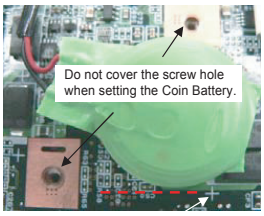

Avoid coming over the horizontal line of the cross mark on the board.

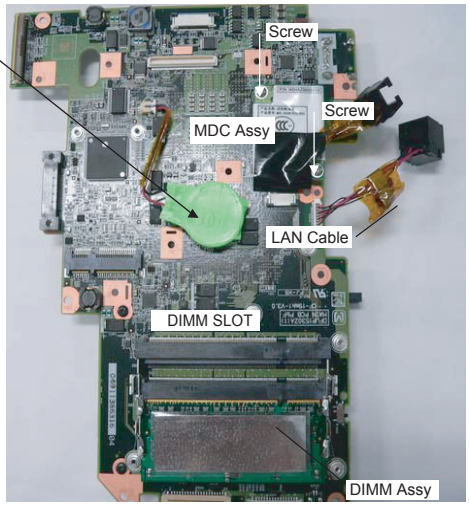

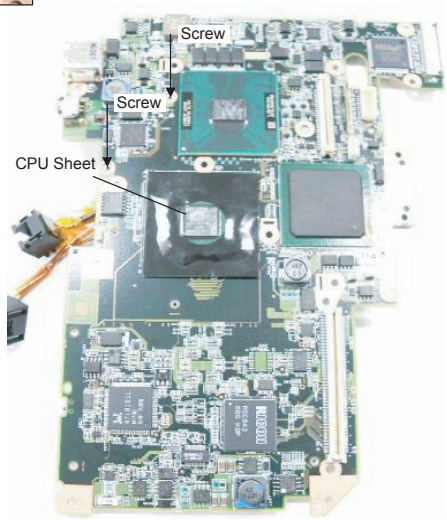

Downloaded from www.Manualslib.com manuals search engine

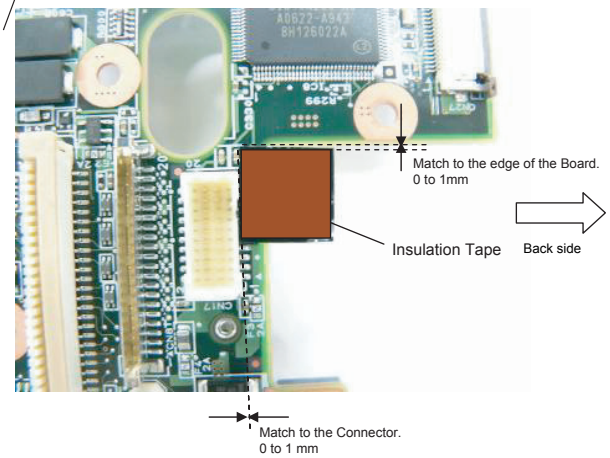

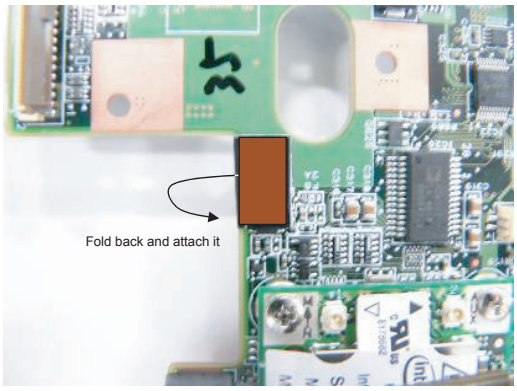

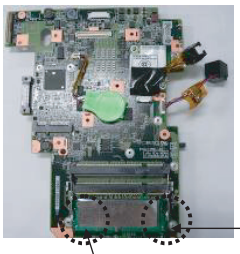

Remove the DIMM and attach the Sheet.
Set the DIMM after attaching the Sheet.

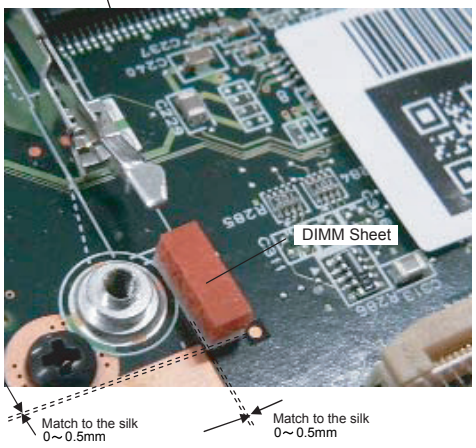

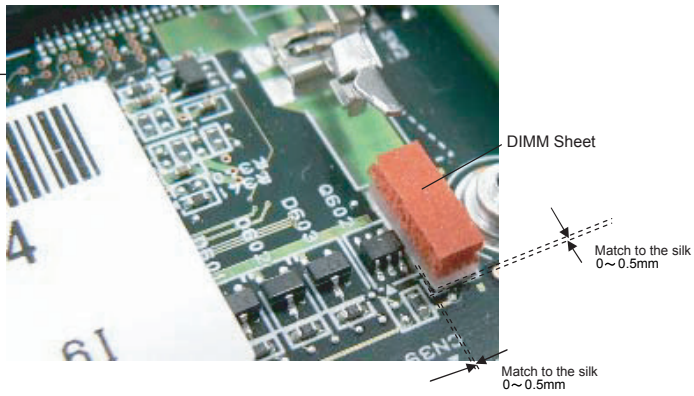

Downloaded from www.Manualslib.com manuals search engine

■ Assembly of Main Unit

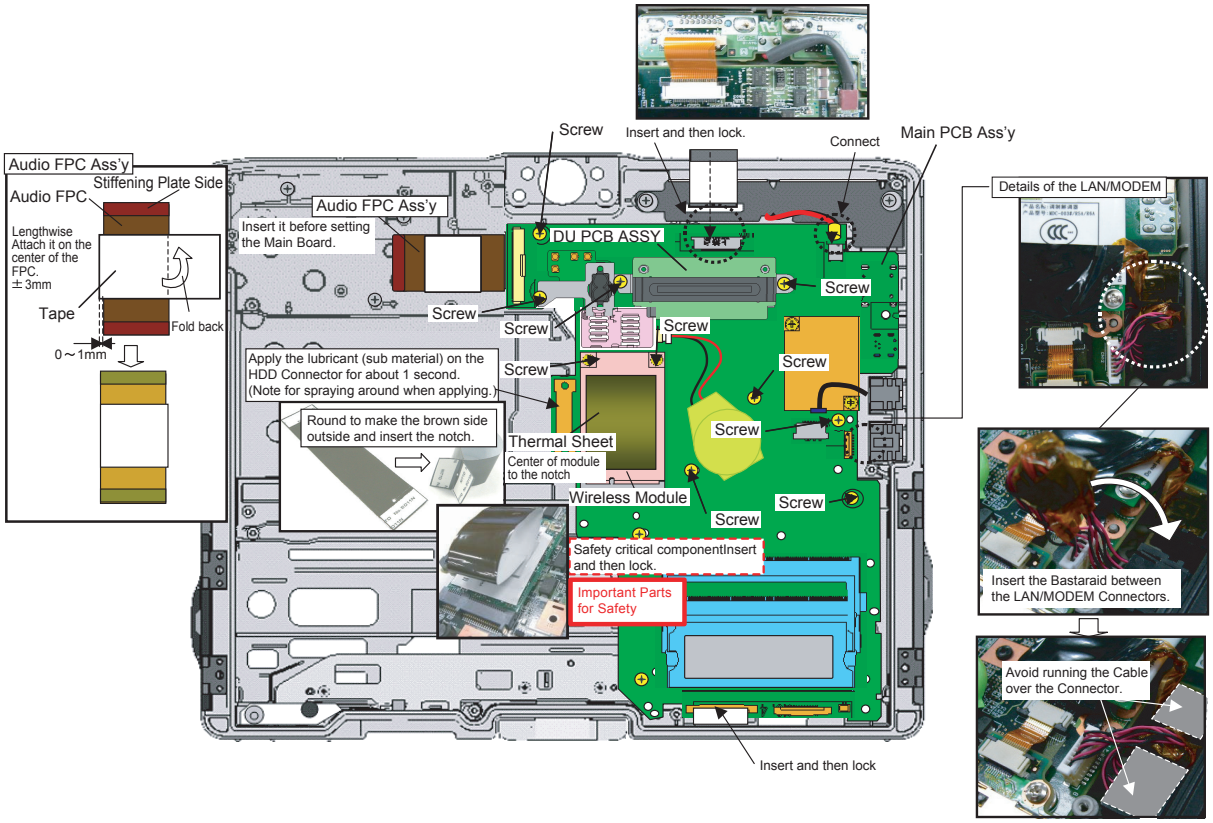

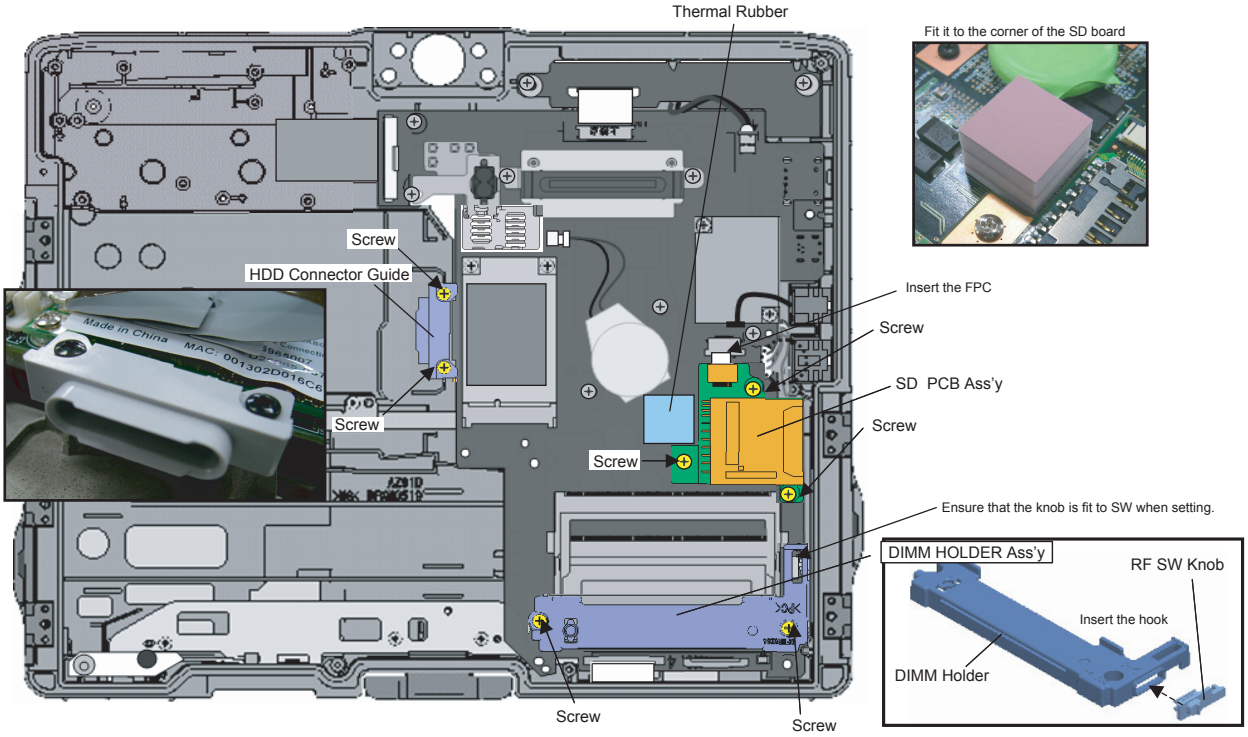

Downloaded from www.Manualslib.com manuals search engine

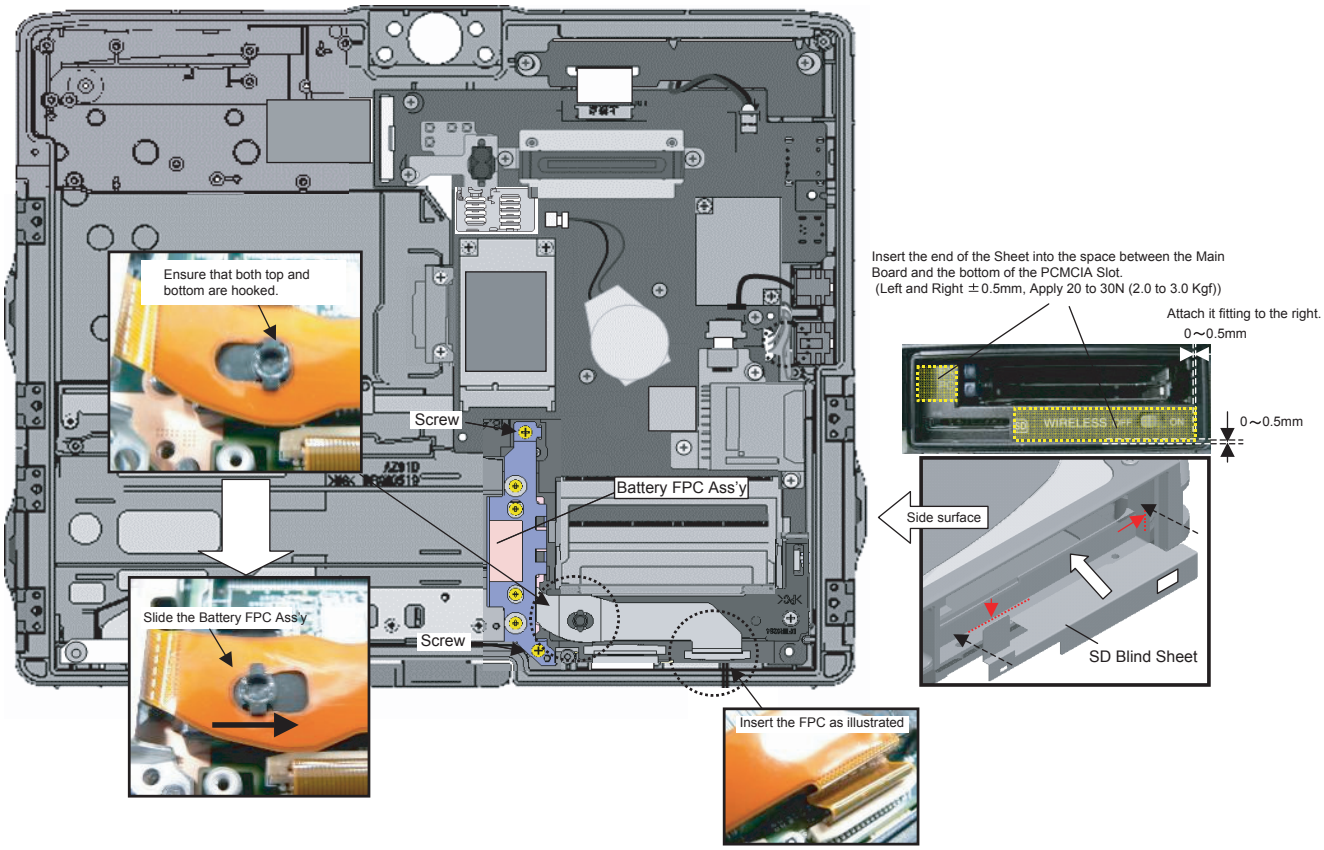

9.2.12. Setting the Audio PCB

1. Connect the Cable to the Connector. (CN901)
2. Fix the Audio PCB using the 3 Screws. <N9>

Note:

Tighten the Screws in the numbered order (No1 to No3).

Screws <N9> : DRSB2+5FKL

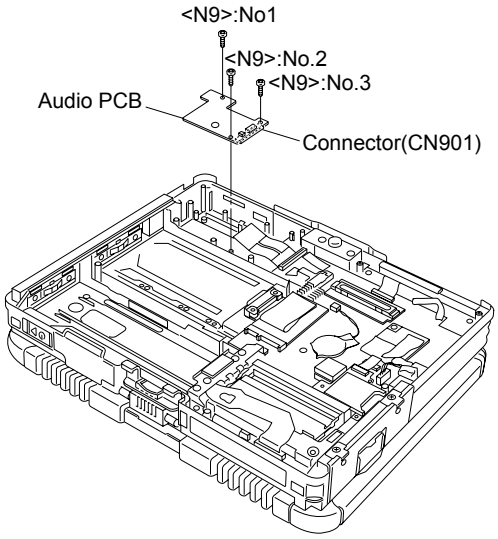

Downloaded from www.Manualslib.com manuals search engine

9.2.13. Setting the HSDPA PCB and Bluetooth PCB

1. Fix the Plate and Bluetooth PCB using the 2 Screws <N19>.
2. Connect the Cable to the Connector. (CN1)
3. Connect the Cable to the Connector. (CN604)
4. Fix the Plate and the Board using the 4 Screws <N19>.
5. Attach the blue Antenna Cable to the Clamper.

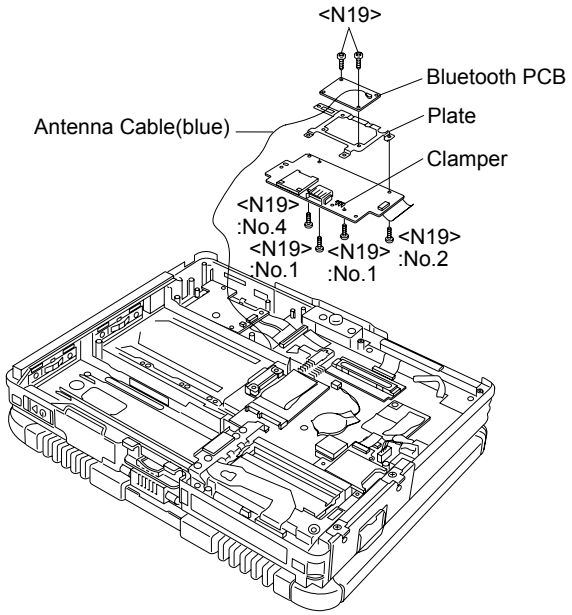

6. Connect the Cable to the Connector. (CN600)
7. Fix the RF PCB Ass'y using the 4 Screws. <N9>
8. Attach the Tape.
9. Attach the brown and black Antenna Cables.
10. Attach the Cable Holder Cushion.

Screws <N9> : DRSB2+5FKL
Screws <N19> : XSB2+3FNL

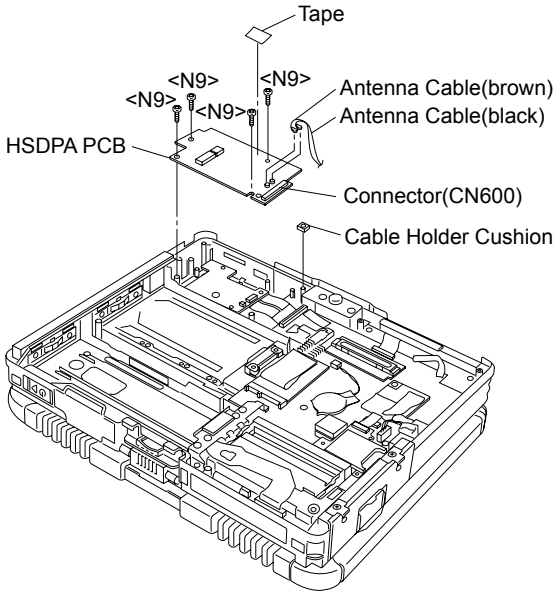

Downloaded from www.Manualslib.com manuals search engine

■ Line Processing of Antenna Cable of Main Unit

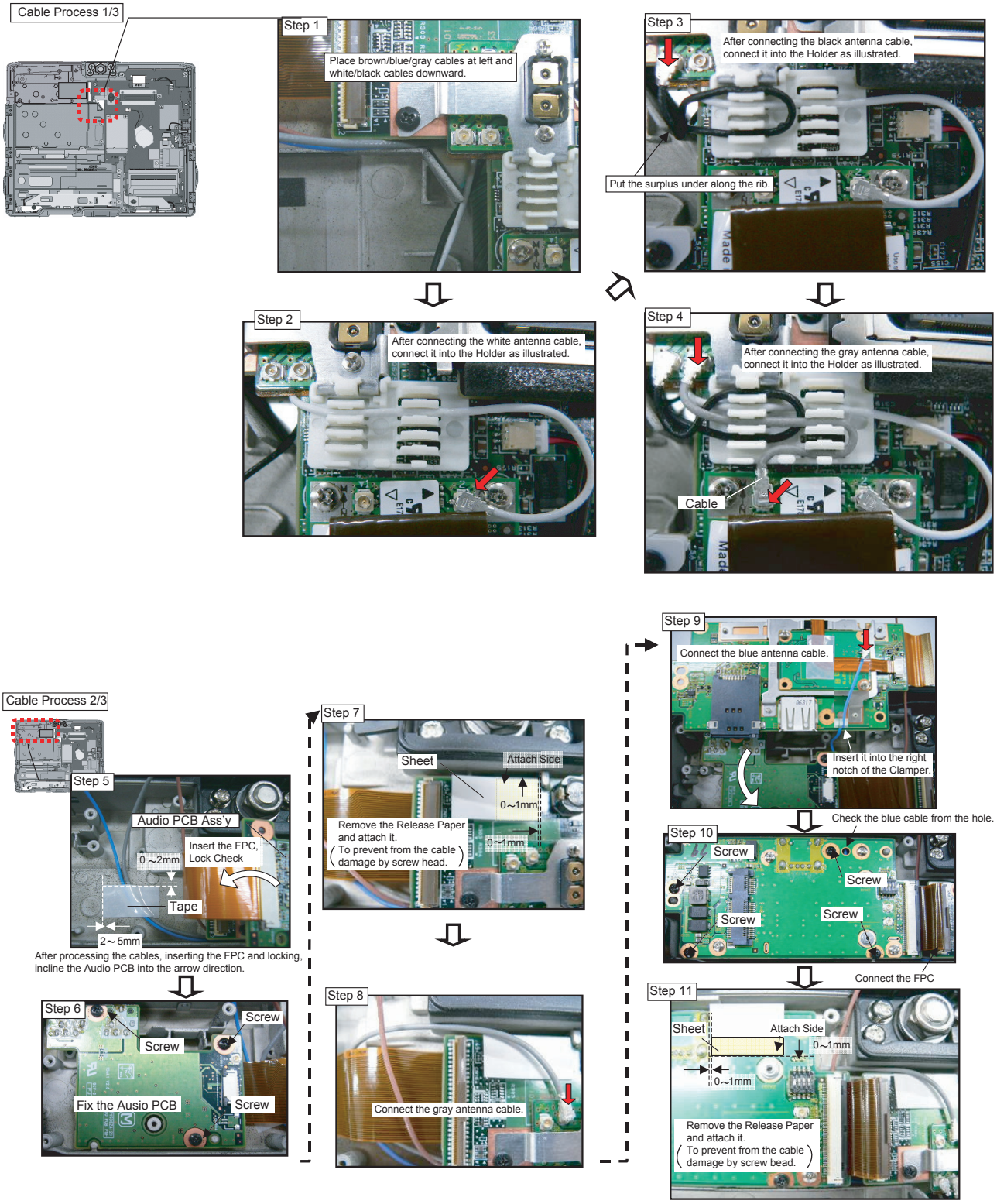

Downloaded from www.Manualslib.com manuals search engine

Cable Process 3/3 ①

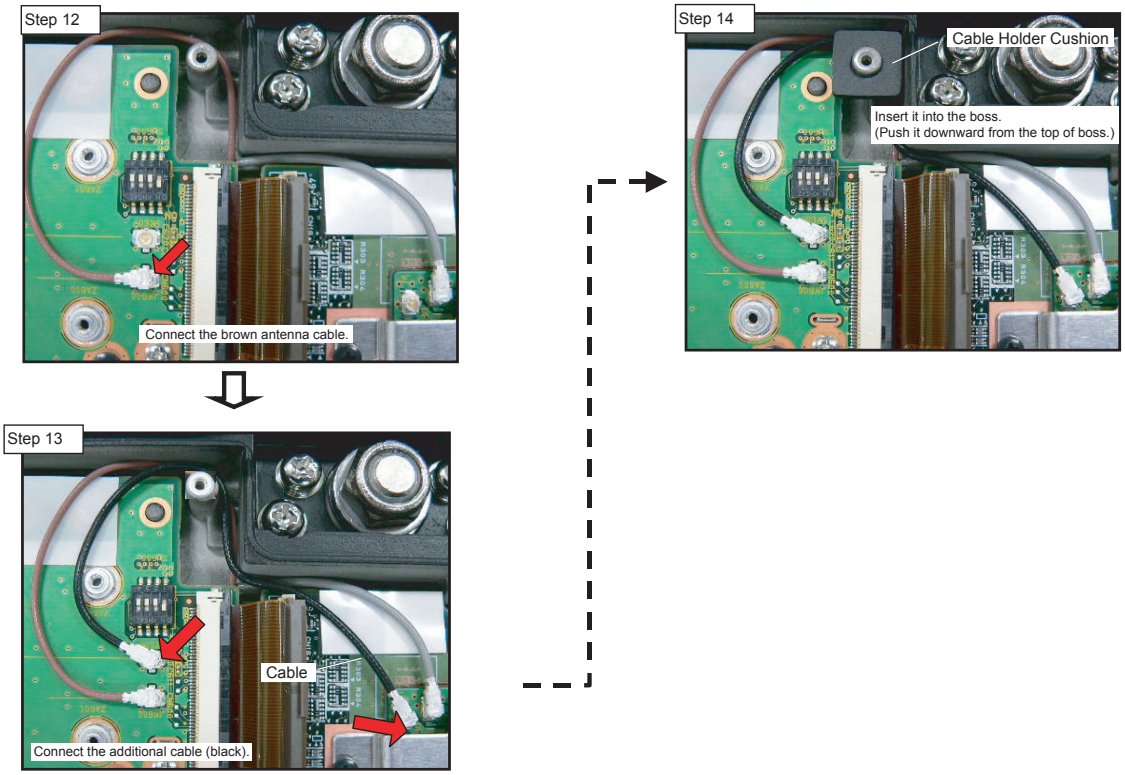

9.2.14. Assembling the DU Lid Unit

1. Fix the DU Lid Angle and the DU Lid using the 7 Screws. <K14-9>

Screws <K14-9> : DXQT2+D25FNL

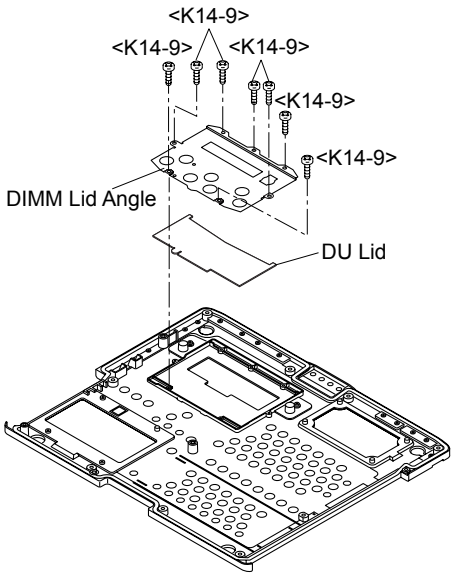

Downloaded from www.Manualslib.com manuals search engine

9.2.15. Setting the Rear Cabinet

1. Fix the Rear Cabinet on the Computer using the 13 Screws. <N10>
2. Close the Lid Covers.

Note:

Tighten the Screws in the numbered order (No1 to No13).

Screws <N10> : DRHM0061ZA

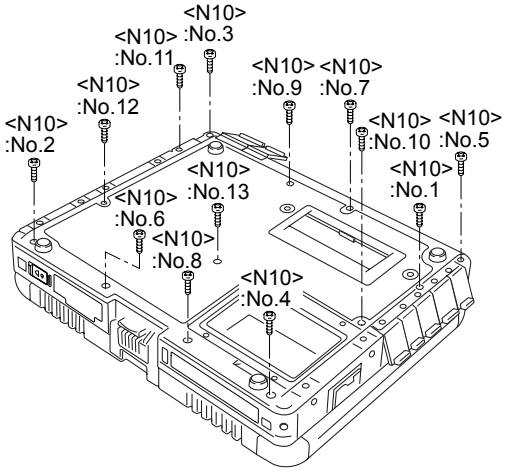

■ Cautions for Setting the Rear Cabinet

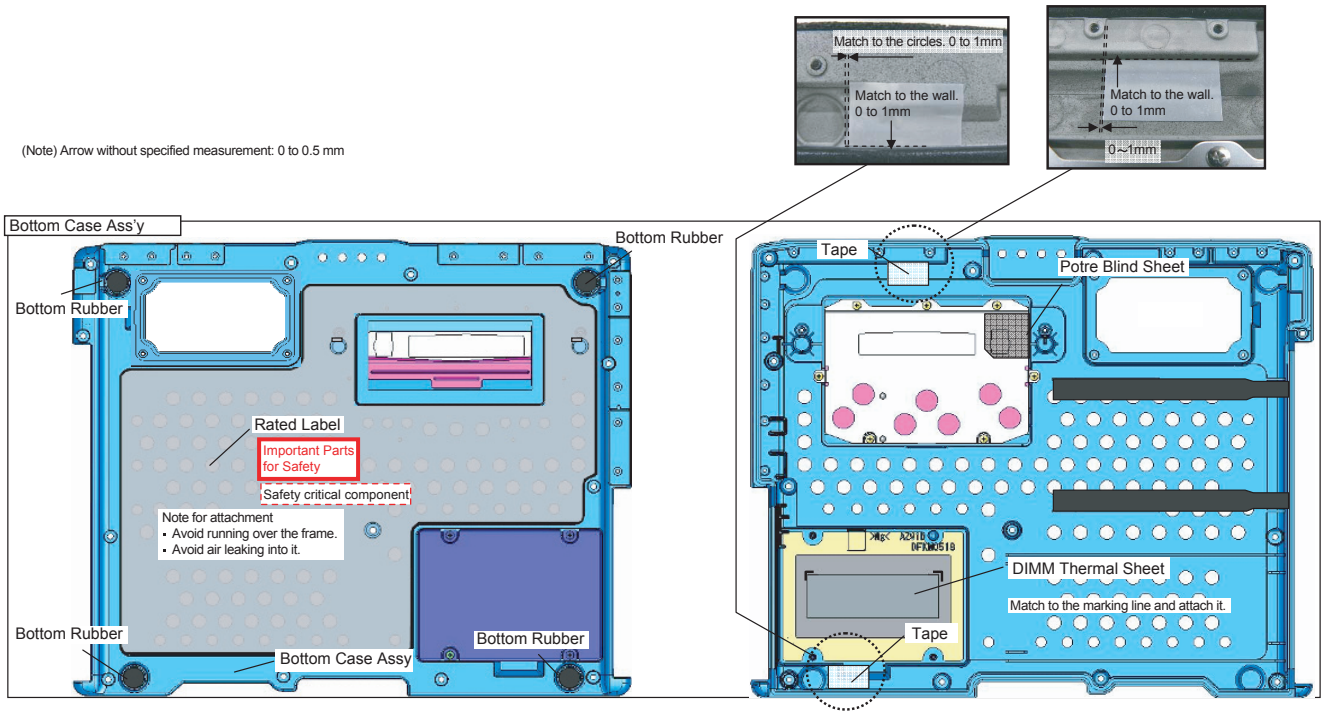

9.2.16. Setting the DIMM Lid Ass'y

1. Fix the DIMM Lid Ass'y using the 4 Screws. <K14-8>

Screws <K14-8> : DRHM5025YAT

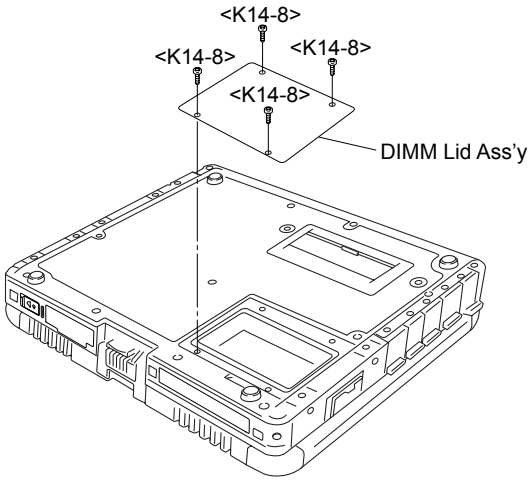

Downloaded from www.Manualslib.com manuals search engine

9.2.17. Setting the Touch Pad and Keyboard

1. Connect the Cable to the Connector (CN800), and attach the Touch Pad to the computer.
2. Set the Click Button Plate.
3. Attach the new TP Tape over the Touch Pad.
4. Attach the Palm Rest Ass'y on the computer.

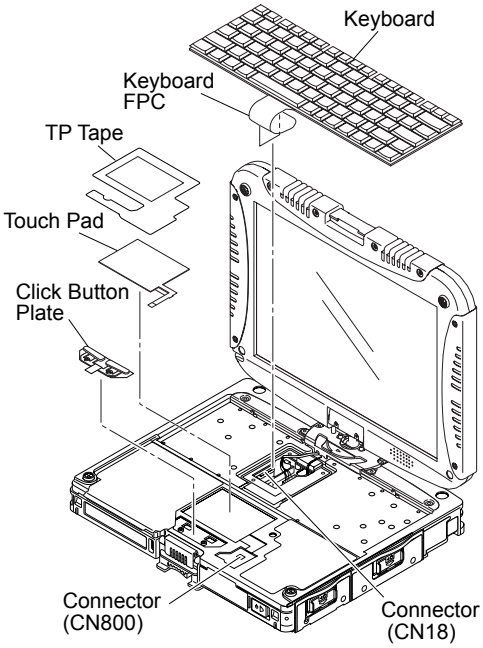

5. Connect the Cable of the Keyboard to the Connector (CN18) on the Main PCB.
6. Fix the KBD Connector Cover using the three Screws. <N1>

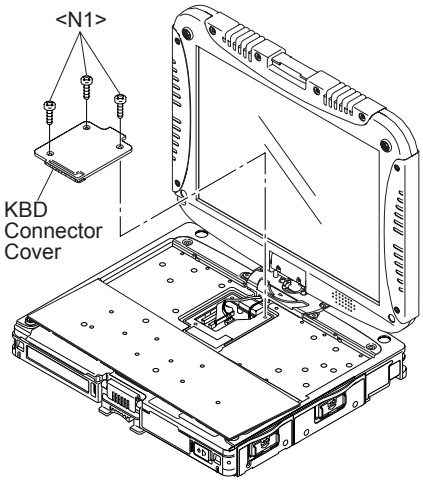

7. Set the Keyboard to the computer.

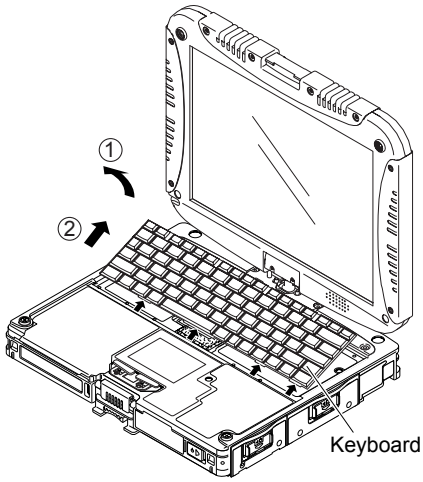

8. Fix the KBD Plate using the four Screws. <N9>

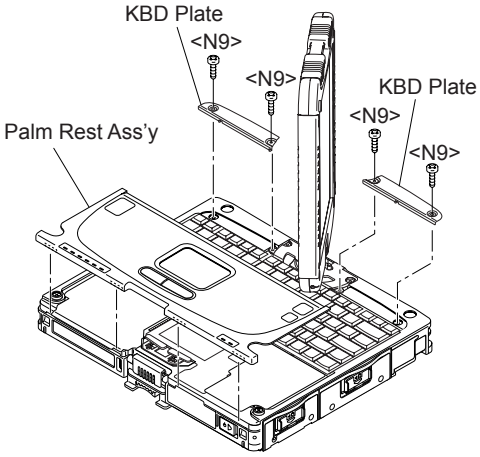

Screws <N1> : DFHE5025XA
Screws <N9> : DRSB2+5FKL

Downloaded from www.Manualslib.com manuals search engine

■ Putting of the Sheet

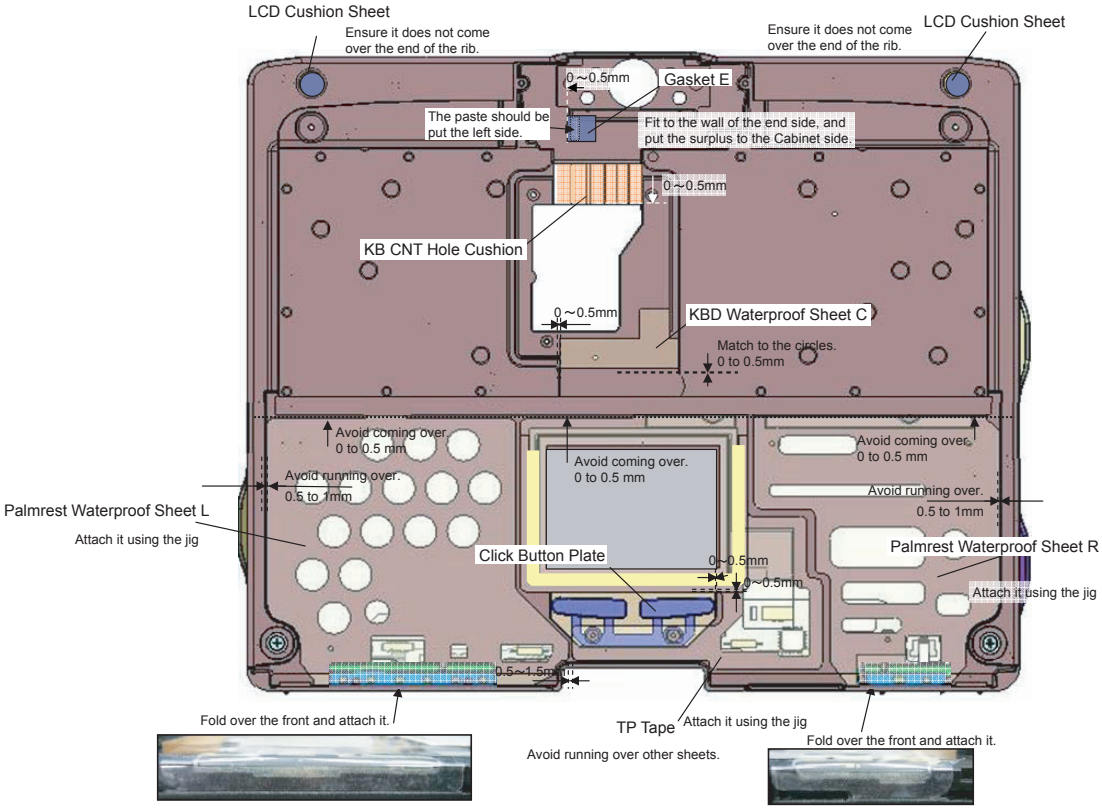

Because the sheets described on this page are waterproof sheets, the whole parts should be put pressure after attaching.
(Especially, put pressure around the sheets.)

*Apply the load to attach.
30 to 40N (3.0 to 4.0Kgf)

■ Cautions for Setting the Keyboard

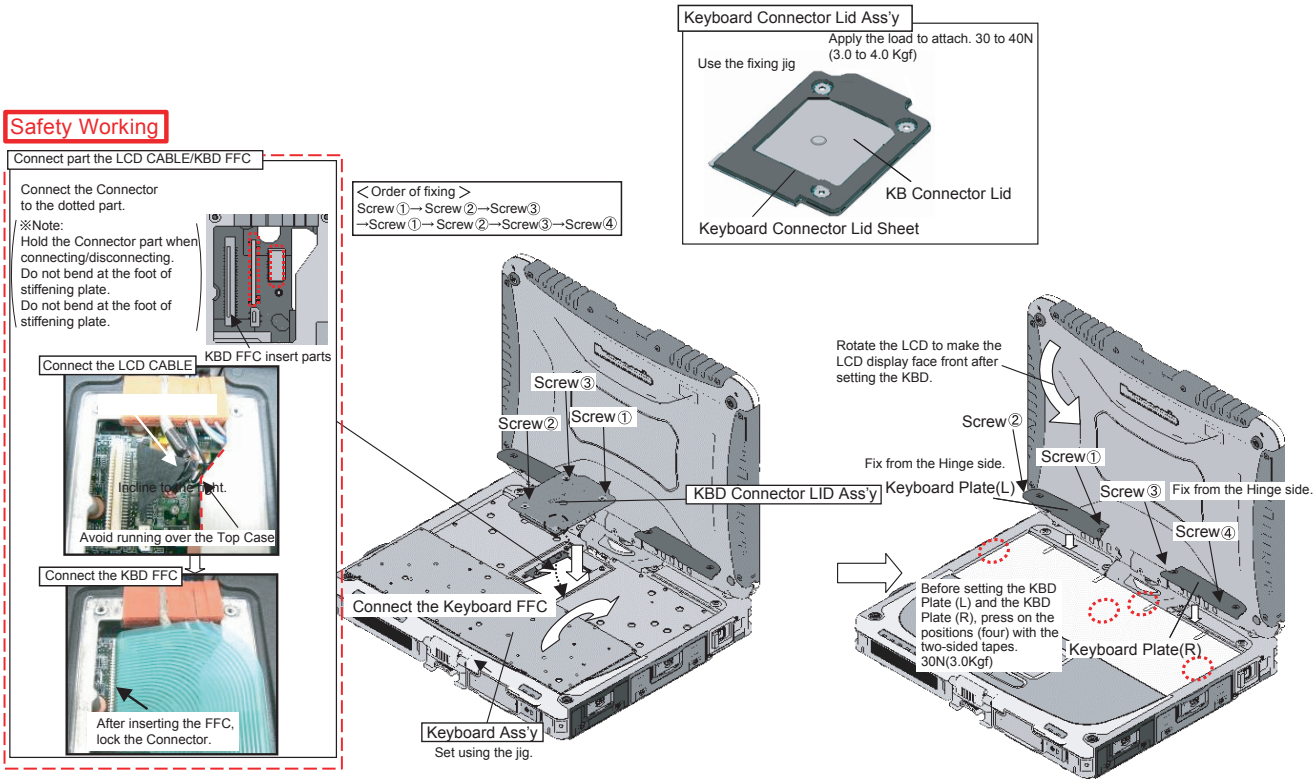

Downloaded from www.Manualslib.com manuals search engine

■ Putting of the Palm Rest ASSY

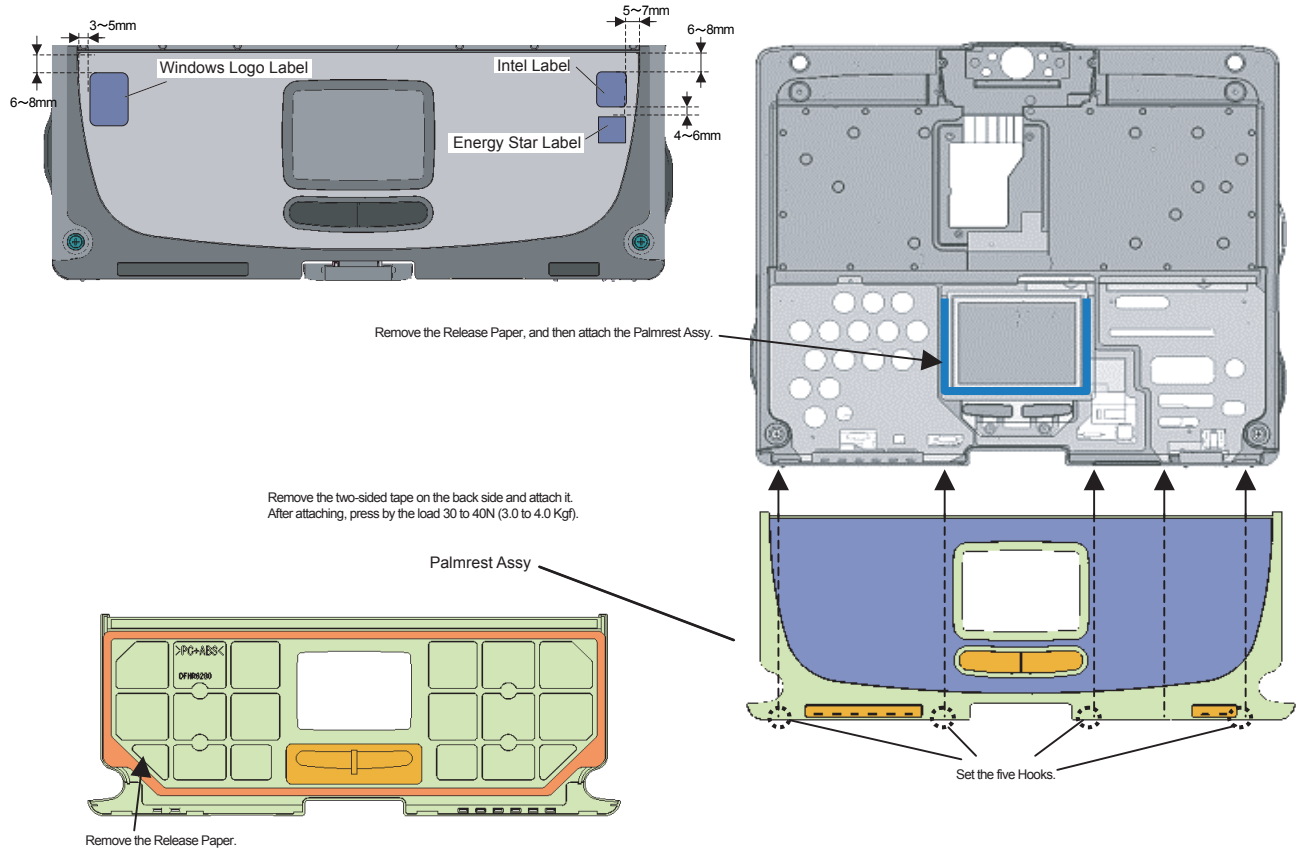

■ Putting of the KBD Tape

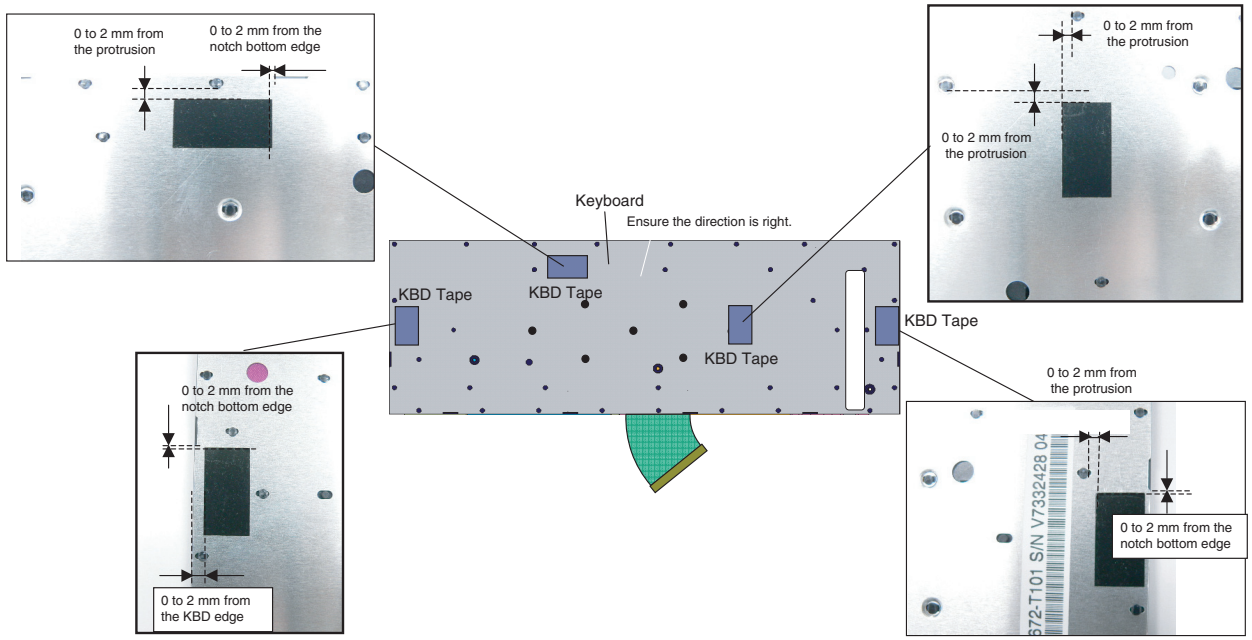

Downloaded from www.Manualslib.com manuals search engine

9.2.18. Setting the Battery Pack and the HDD Pack

1. Set the HDD in the HDD Case and fix it using the 2 Screws. <N13>

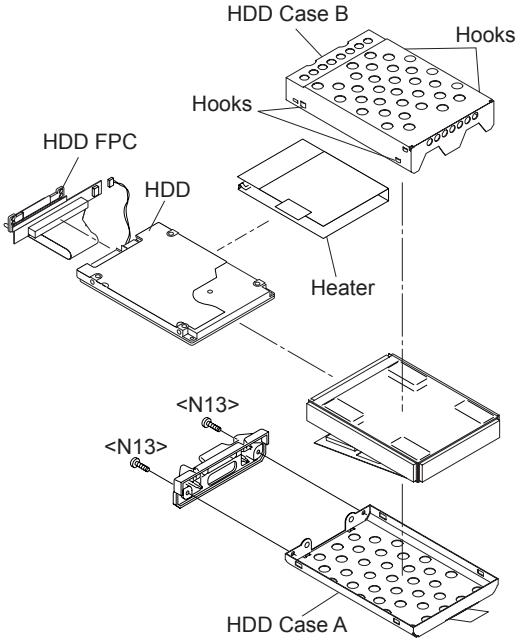

2. Open the HDD Cover and set the HDD Pack.
3. Open the Battery Cover and set the Battery.

Screws <N13> : DXQT2+D4FNL

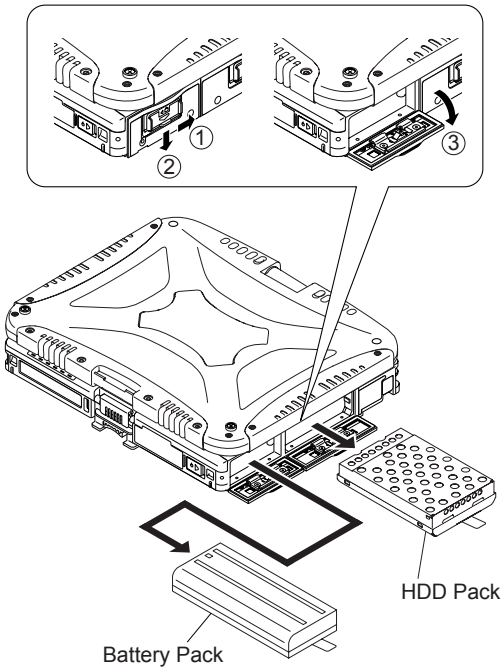

Downloaded from www.Manualslib.com manuals search engine

■ Assembly of the HDD ASSY

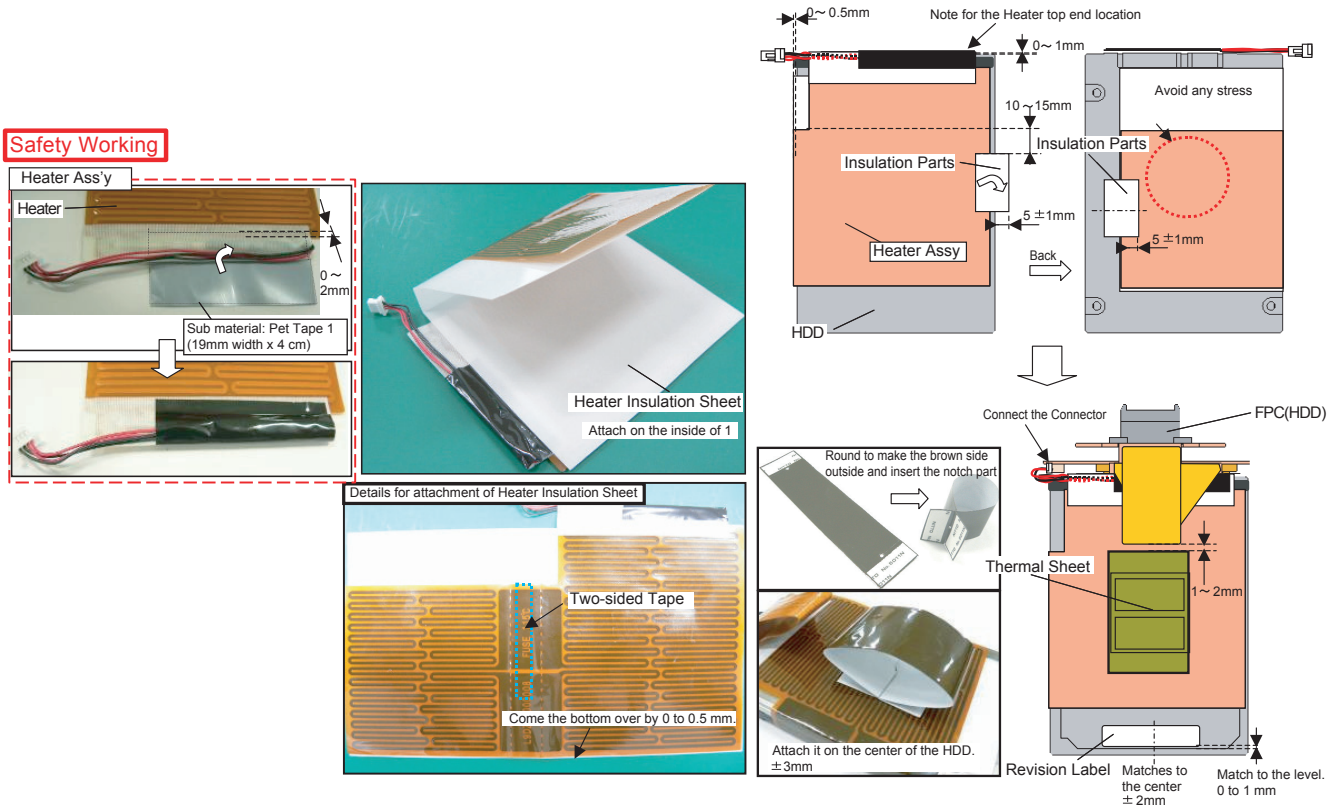

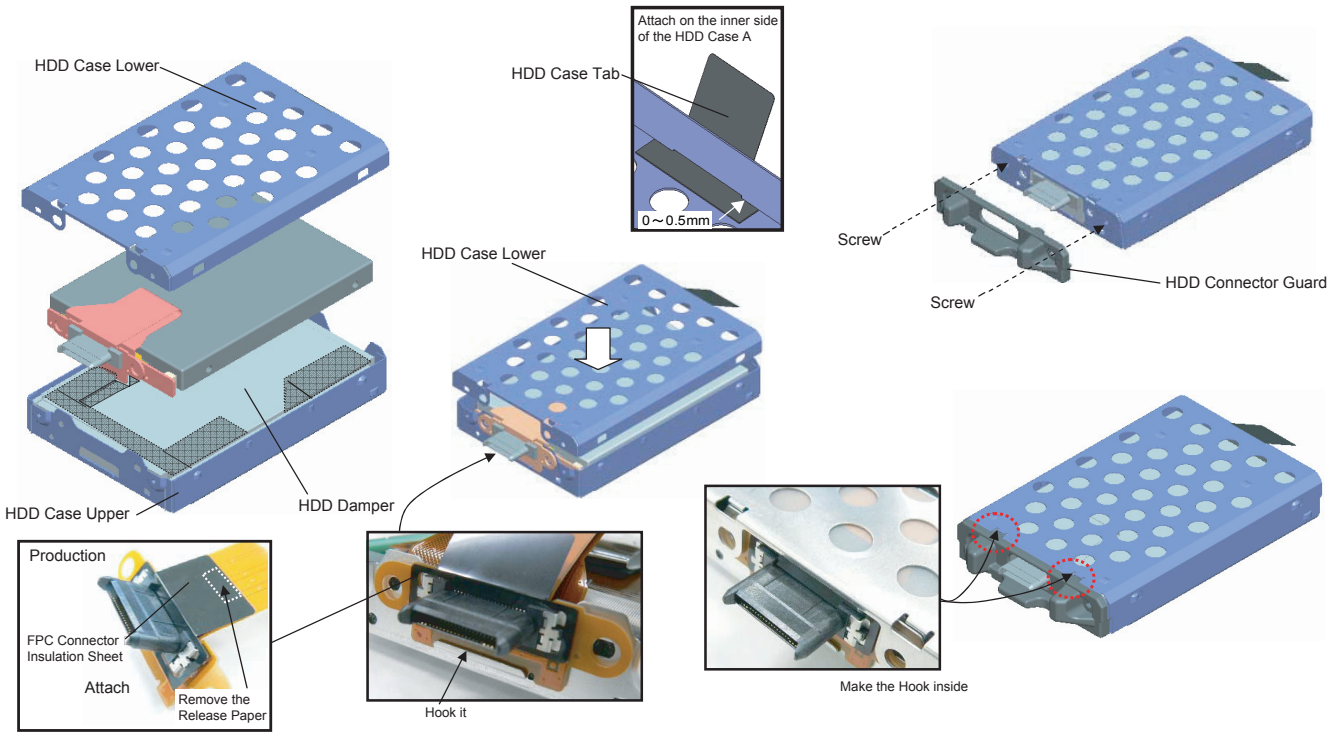

Downloaded from www.Manualslib.com manuals search engine

9.2.19. Assembling the Each Cover

1. Fix the Battery LID Ass'y, the HDD LID Ass'y, and the PCMCIA LID Ass'y using the 6 Screws. <K12-16>
2. Set the Rear Cabinet.
3. Fix the Modem/LAN LID Rubber, the LAN LID Rubber, the USB LID Rubber, the DC IN LID Rubber, the Serial LID Rubber, the RGB LID Rubber, the Audio LID Rubber and USB Back Rubber using the 14 Screws. <N6>

Note:

Tighten the Screws in the numbered order (No1 to No14).

Screws <K12-16> : DRQT26+D3FKL
Screw <N6> : DRHM5025YA

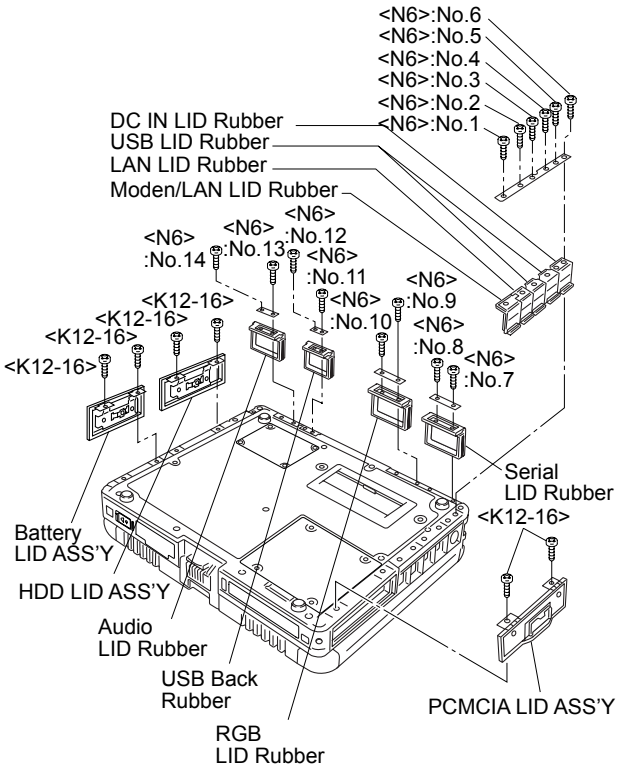

Downloaded from www.Manualslib.com manuals search engine

10 Exploded View

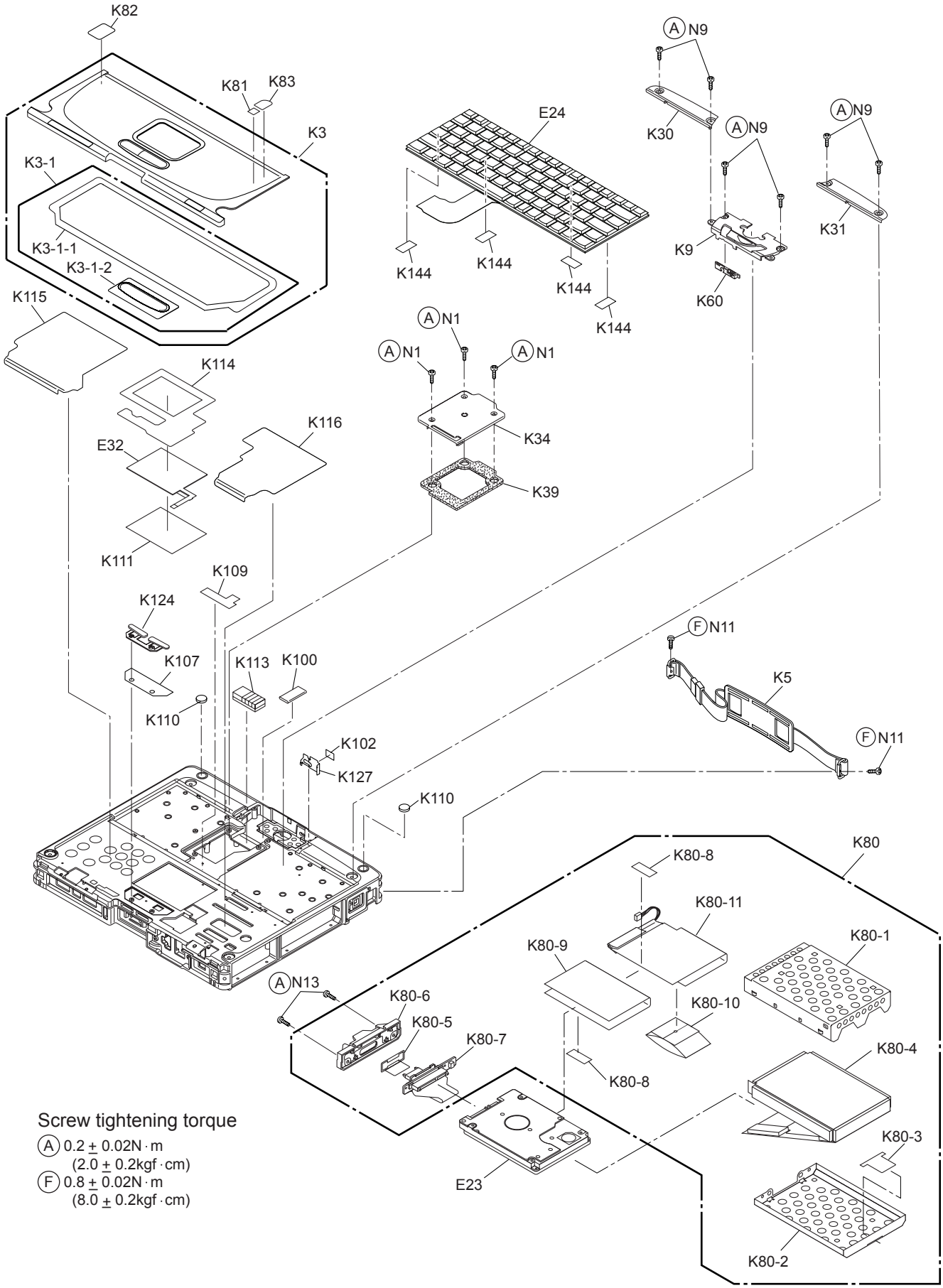

CF-19CHBAXBM

Downloaded from www.Manualslib.com manuals search engine

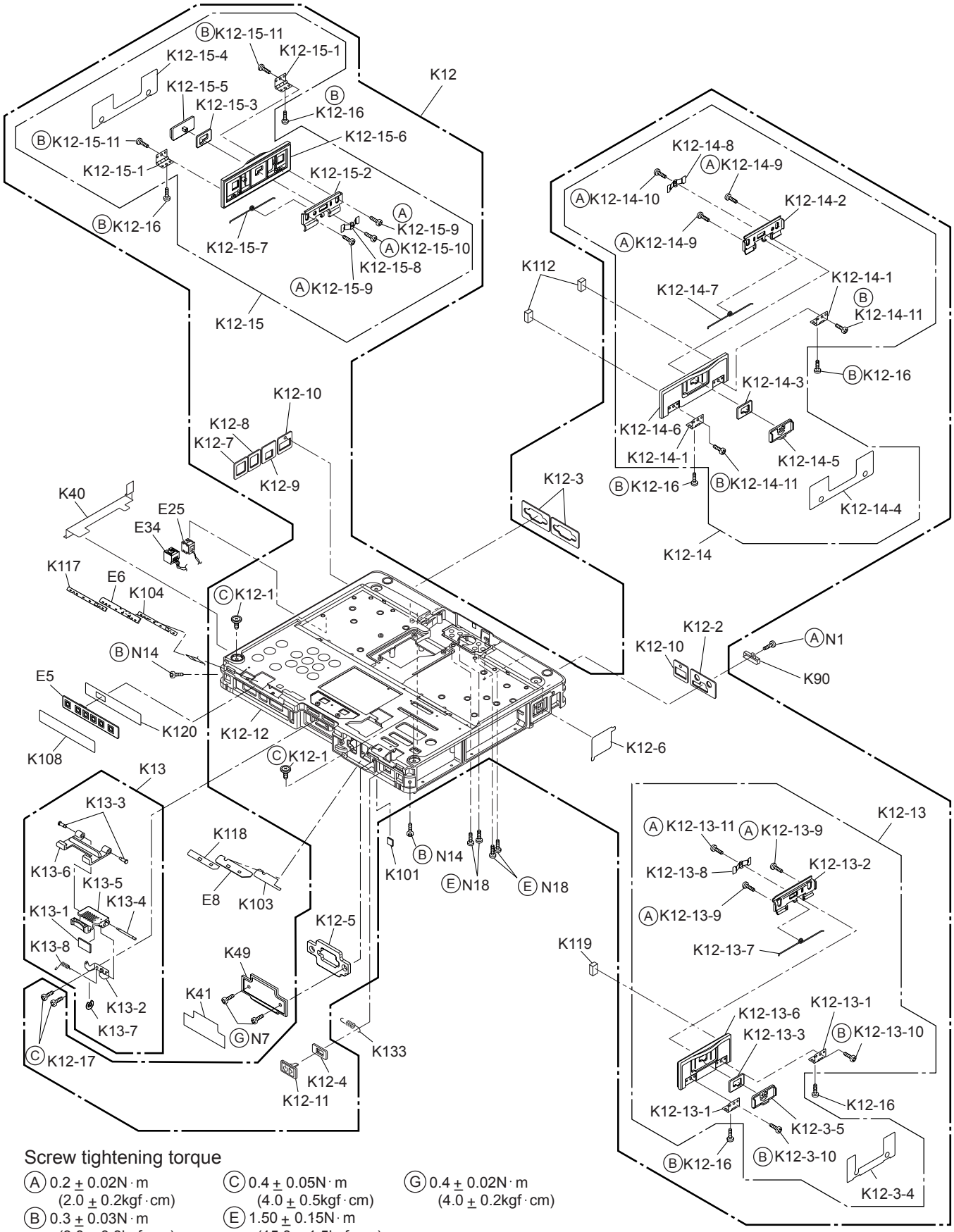

Screw tightening torque

Ⓐ 0.2 ± 0.02N · m (2.0 ± 0.2kgf · cm)
Ⓑ 0.3 ± 0.03N · m (3.0 ± 0.3kgf · cm)
Ⓒ 0.4 ± 0.05N · m (4.0 ± 0.5kgf · cm)
Ⓔ 1.50 ± 0.15N · m (15.0 ± 1.5kgf · cm)
Ⓖ 0.4 ± 0.02N · m (4.0 ± 0.2kgf · cm)

Downloaded from www.Manualslib.com manuals search engine

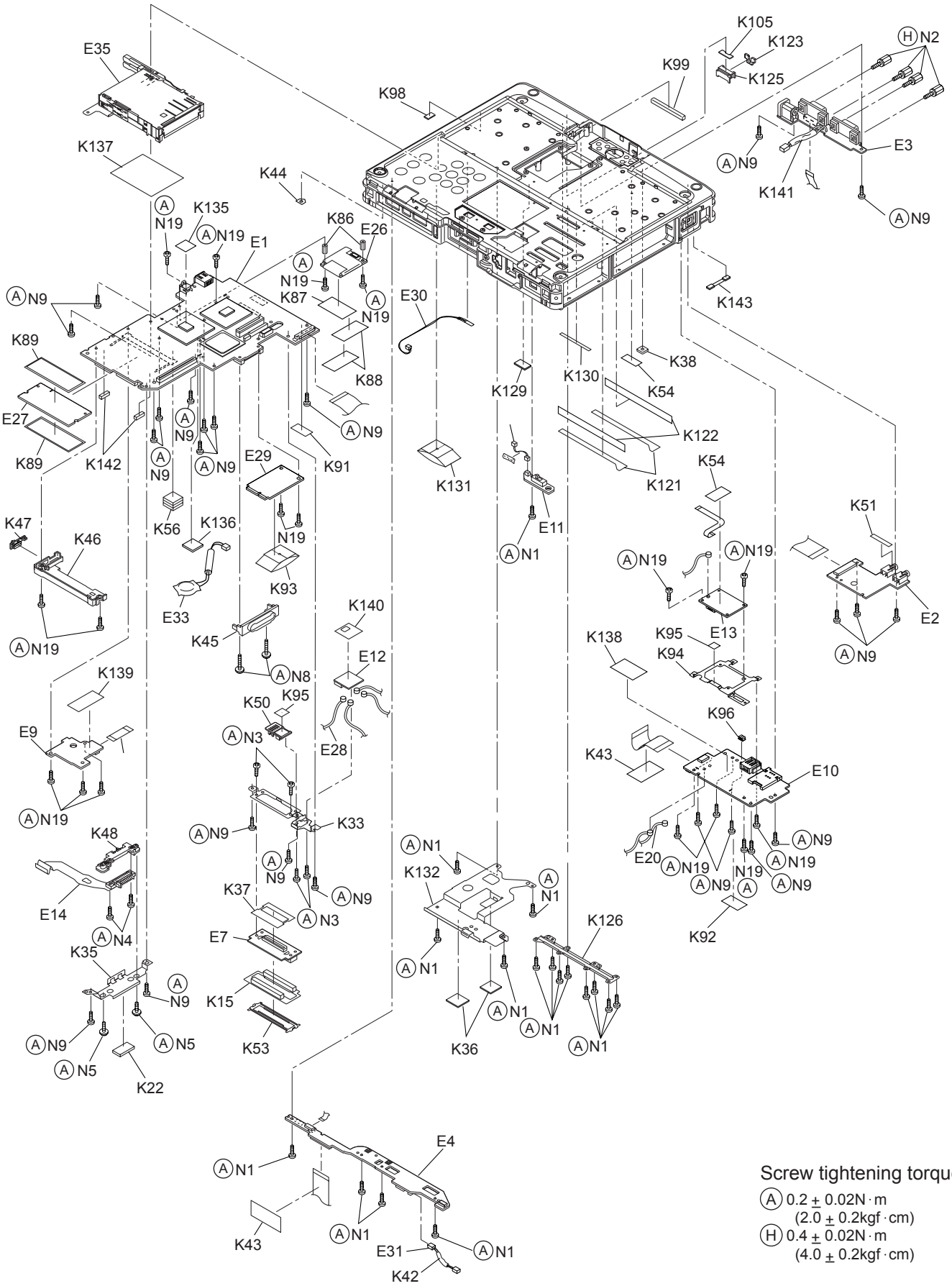

Screw tightening torque

Ⓐ 0.2 ± 0.02N · m
(2.0 ± 0.2kgf · cm)

Ⓗ 0.4 ± 0.02N · m
(4.0 ± 0.2kgf · cm)

CF-19CHBAXBM

Downloaded from www.Manualslib.com manuals search engine

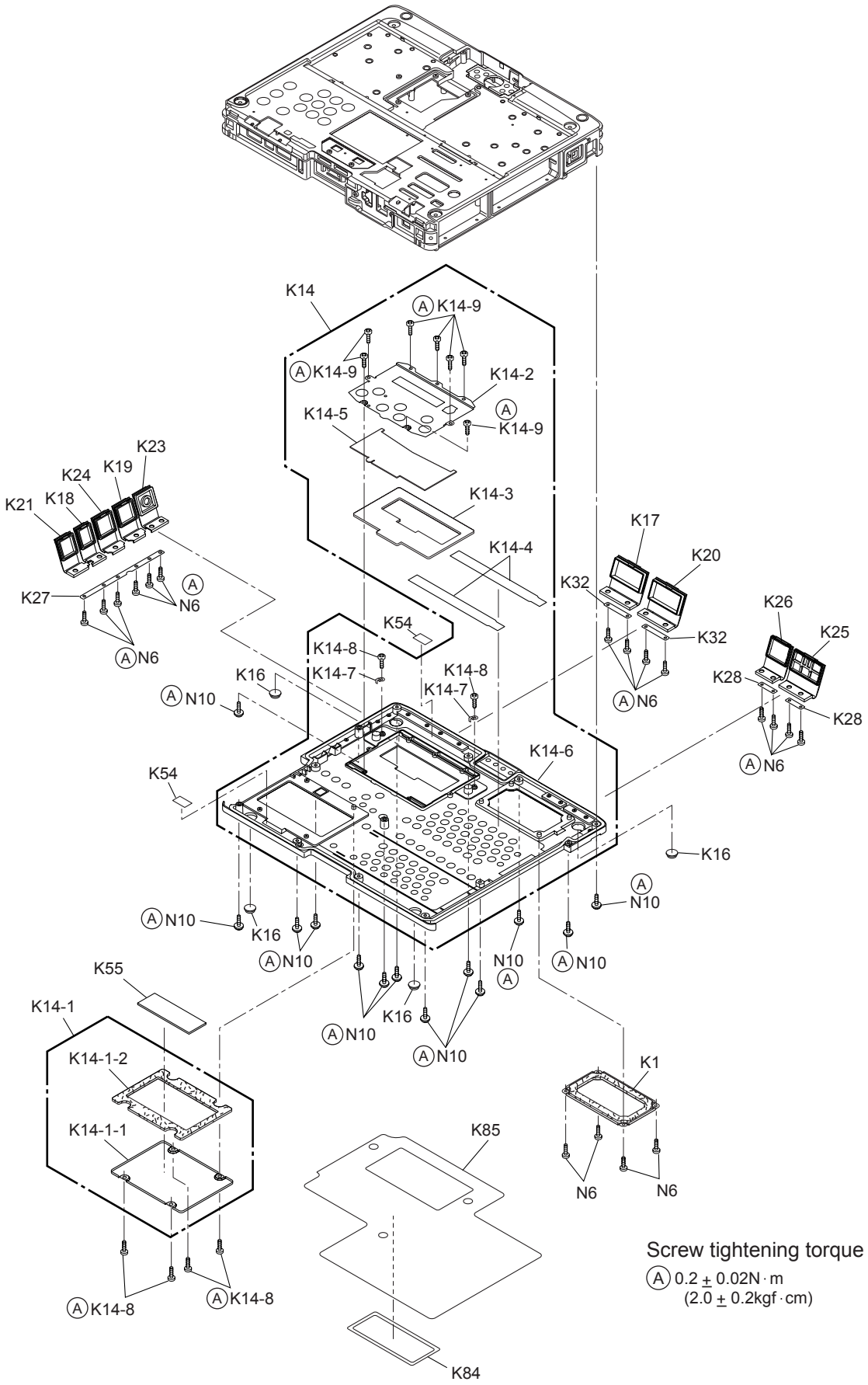

CF-19CHBAXBM

Downloaded from www.Manualslib.com manuals search engine

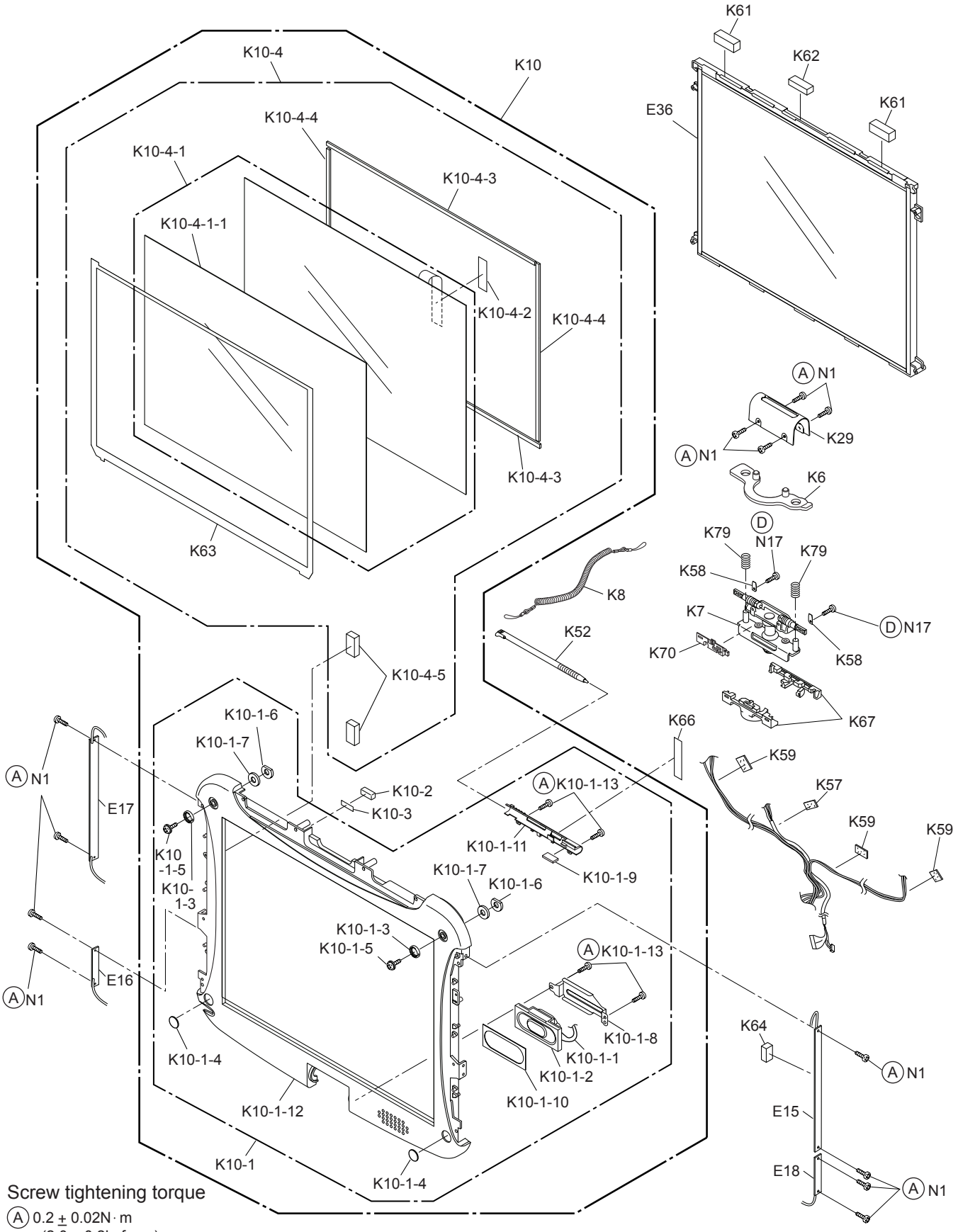

Screw tightening torque

(A) 0.2 ± 0.02N · m
(2.0 ± 0.2kgf · cm)

(D) 0.8 ± 0.08N · m
(8.0 ± 0.8kgf · cm)

CF-19CHBAXBM

Downloaded from www.Manualslib.com manuals search engine

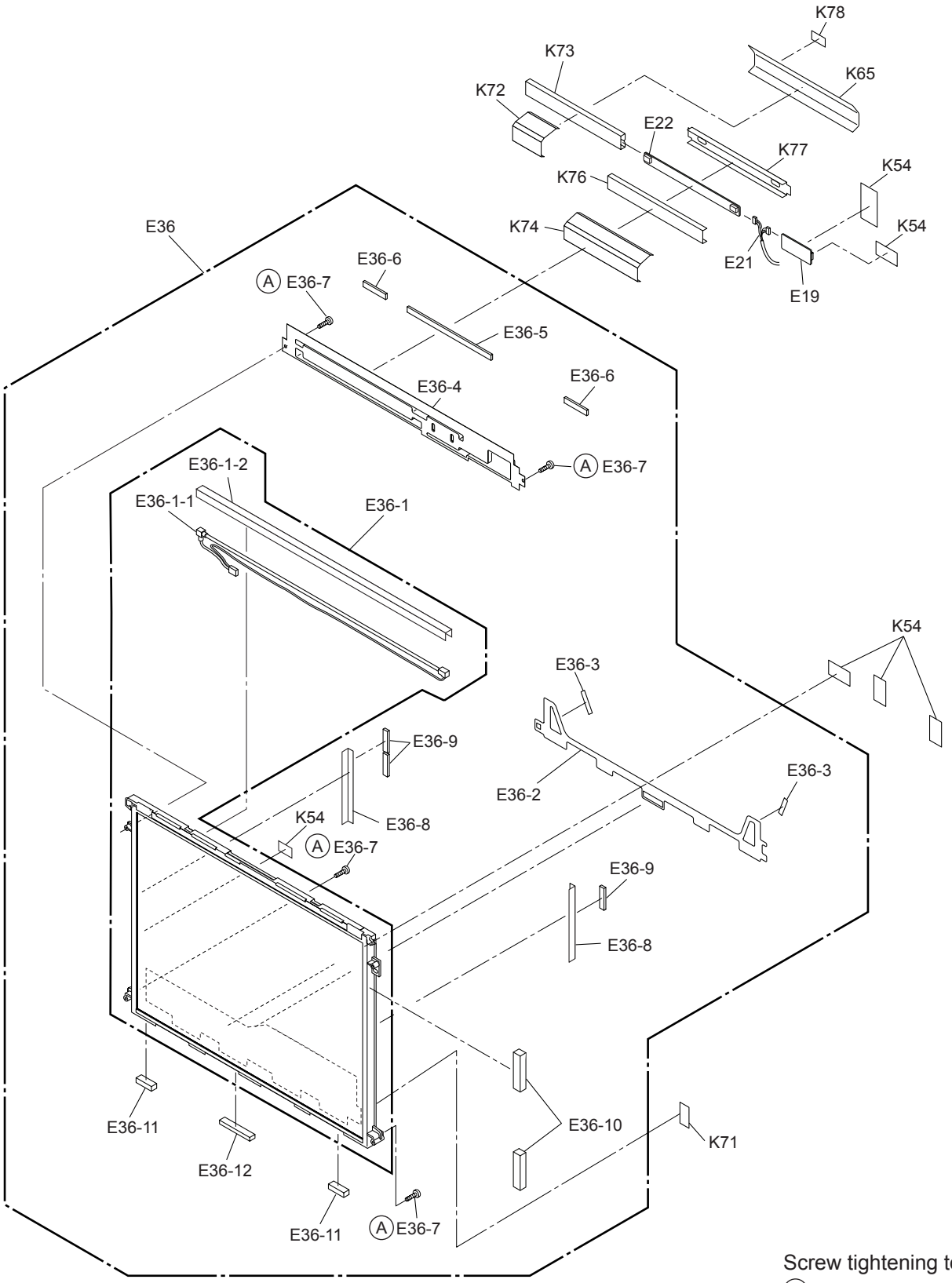

Screw tightening torque

A 0.18 ± 0.02N · m
(1.8 ± 0.2kgf · cm)

CF-19CHBAXBM

Downloaded from www.Manualslib.com manuals search engine

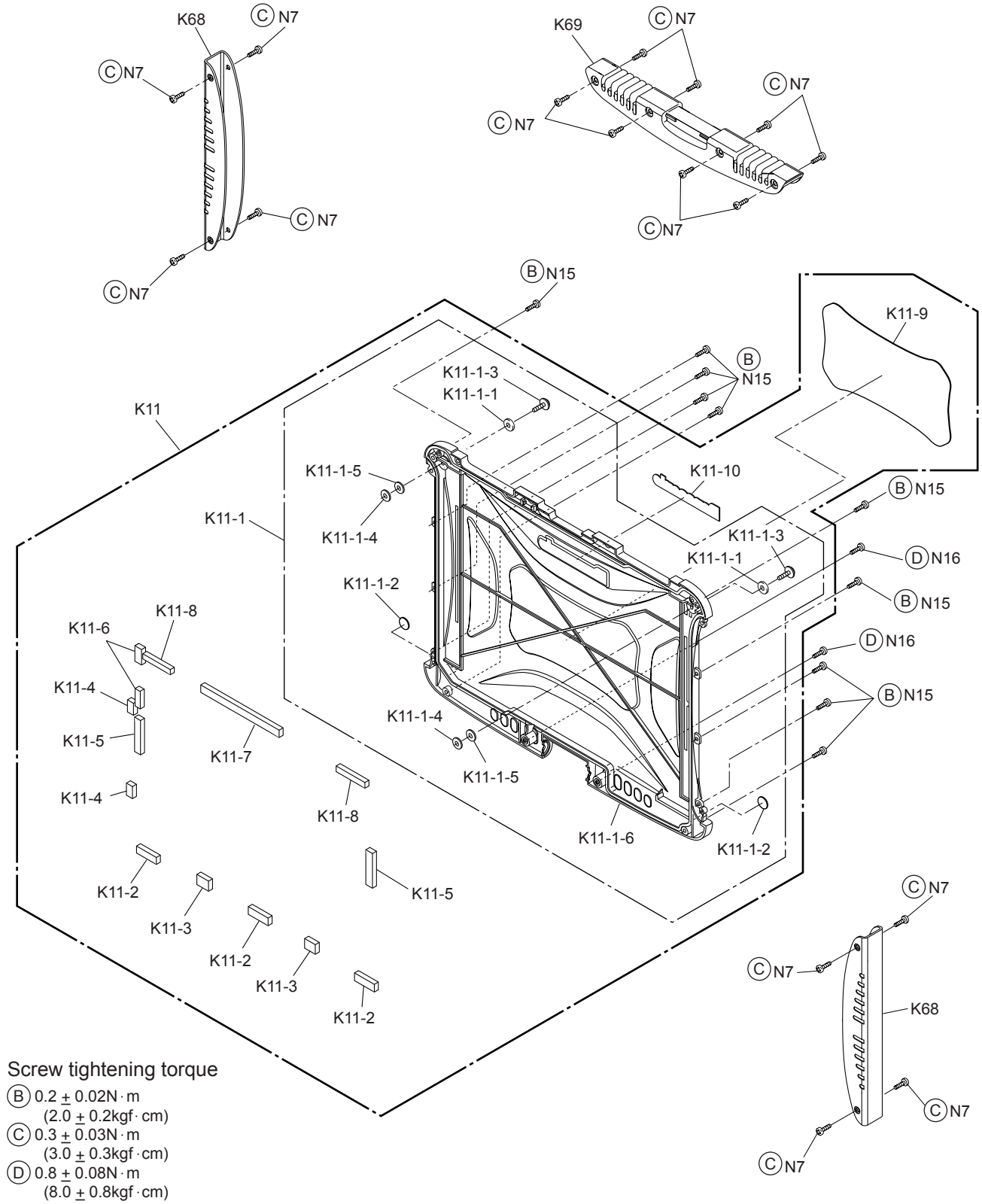

Screw tightening torque

(B) 0.2 ± 0.02N·m
(2.0 ± 0.2kgf·cm)

(C) 0.3 ± 0.03N·m
(3.0 ± 0.3kgf·cm)

(D) 0.8 ± 0.08N·m
(8.0 ± 0.8kgf·cm)

CF-19CHBAXBM

Downloaded from www.Manualslib.com manuals search engine

11 Replacement Parts List

Note : Important Safety Notice
Components identified by ⚠ mark have special characteristics important for safety.
When replacing any of these components, use only manufacturer's specified parts.

CF-19CHBAXBM (2006/12/06)

REF. NO and AREA	PART NO.	DESCRIPTION	Q'TY
Main Block Unit			
E1	DL3U11530AAA	PCB, MAIN RTL	1
E2	DL3U21530AAA	PCB, AUDIO RTL	1
E3	DL3U31530AAA	PCB, IO RTL	1
E4	DL3U11550BAA	PCB, PAD RTL	1
E5	DL3U21550BAA	PCB, SW RTL	1
E6	DL3U31550BAA	PCB, LED-LEFT RTL	1
E7	DL3U41550BAA	PCB, PR RTL	1
E8	DL3U61550BAA	PCB, LED-RIGHT RTL	1
E9	DL3U71550BAA	PCB,SD RTL	1
E10	DL3U81550BAA	PCB, HSDPA RTL	1
E11	DL3U91550BAA	PCB, POWERSW RTL	1
E12	DL3UP1552AAA	PCB, EXT ANT UNIT RTL	1
E13	DL3UP1558BAA	PCB, BT 2.0 UNIT RTL	1
E14	DL3UP1566AAA	BAT FPC UNIT	1
E15	DL3U11553AAA	WWAN MAIN ANT	1
E16	DL3U21553AAA	WWAN AUX ANT	1
E17	DL3U31553AAA	LAN-MAIN BT ANT	1
E18	DL3U41553AAA	LAN AUX ANT	1
E19	DL3U11605AAA	CF-19 TS PCB	1
E20	DFJS1060ZA	WWAN COAXIAL CABLE	1
E21	DFJS1039YA	LCD CABLE TS	1
E22 ⚠	N0GB1J000018	INVERTER	1
E23 ⚠	N3CAYYY00012	HDD	1
E24	N2ABAJ000001	KEYBOARD US	1
E25	DFJS1061ZA	MODEM JACK CABLE	1
E26 ⚠	N5HAZ0000014	MODEM	1
E27	N5ZZ00000119	PC2-4200 SODIMM 512M INFINEON	1
E28	DFJS1059ZA	WLAN COAXIAL CABLE	1
E29 ⚠	N5HZC0000019	WIRELESS LAN MODULE	1
E30	D4CZY103A003	THERMISTOR	1
E31	DFJS1043ZA	POWER SW CABLE	1
E32	N2EABEC00006	TOUCHPAD	1
E33	BR-2330A/SF	LITHIUM COIN BATTERY	1
E34	DFJS1062ZB	LAN JACK CABLE	1
E35	K1NB94B00001	EXPRESS PCMCIA COMBO SLOT	1
E36	DFWV08A0089	LCD UNIT ASS'Y	1
E36-1	DL3DW0182AAA	LCD ASS'Y	1
E36-1-1	A2CA00000056	LCD BACKLIGHT, CCFL	1
E36-1-2	DFHM0290ZA	REFLECTION ANGLE	1
E36-2	DFHR3612ZA	LCD PWB SPACER	1
E36-3	DFHR3647YA	SPACER SHEET	2
E36-4	DFHR3D92YA	LCD BACK DAMPER	1
E36-5	DFHR3570YA	LCD BACK CUSHION L	1
E36-6	DFHR3571YA	LCD BACK CUSHION S	2
E36-7	DXHM0042ZA	SCREW	4
E36-8	DFHR3648ZA	HOLDER SHEET B	2
E36-9	DFHR3453YA	LCD BACK CUSHION SIDE	3

Downloaded from www.Manualslib.com manuals search engine

E36-10	DFHR3B64ZA	LCD SIDE CUSHION A	2
E36-11	DFHR3506YA	LCD SIDE CUSHION C	2
E36-12	DFHR3507YA	LCD SIDE CUSHION D	1
Accessories			
A1 ⚠	NCR-B/603A	LITHIUM ION BATTERY PACK	1
A2 ⚠	CF-AA1633AM1	AC ADAPTOR	1
A3 ⚠	K2CG3DR00003	AC CORD	1
A4 ⚠	DFQX5624ZA	MANUAL(CF-19MK1)	1
A5	DFJS954ZA	MODEM CABLE	1
A6	DFHS9017ZA	TOUCHPANEL FUKINUNO	1
Packing Material			
P1	DFPE0733YA	HOLDER	1
P2	DFPE0859YA	HOLDER	1
P3	DFPK1210ZA	PACKING CASE	1
P4	DFPK1216ZA	ACCESSORY BOX	1
Mechanical Parts			
K1	DFHM9017ZA-0	EZC LID ASSY	1
K3	DFHR9125ZA-0	PALM REST COVER ASSY	1
K3-1	DFHR9124ZA-0	PALM REST ASSY	1
K3-1-1	DFHR3578ZA	ADHESIVE TAPE	1
K3-1-2	DFHR3580YA	ADHESIVE TAPE	1
K4	DFQC9006ZB-0	SHOULDER BELT ASSY	1
K5	DFQC9009ZC-0	STRAP BG ASSY	1
K6 ⚠	DFKE9059YA	LOCK PLATE ASSY	1
K7	DFBH3029VA	HINGE	1
K8	DFME0148ZA	TETHER	1
K9 ⚠	DFKE9086ZA-0	HINGE TOP COVER ASM	1
K10	DFWV80A0366	LCD FRONT CABINET/TS PANEL ASS'Y	1
K10-1 ⚠	DFKF9033ZA-0	FRONT CASE ASS'Y	1
K10-1-1	DFJS1064ZA	SPEAKER CABLE	1
K10-1-2	L0AA04C00012	SPEAKER	1
K10-1-3	DFHG1634YA-0	LCD CABINET CUSHION A	2
K10-1-4	DFHG1635ZA-0	LCD CABINET CUSHION B	2
K10-1-5	DFHM0319YA	LCD ELEPASS	2
K10-1-6	DFHM0321ZA	D WASHER	2
K10-1-7	DFHM0322ZA	SPRING WASHER	2
K10-1-8	DFHM0413ZA	SPEAKER PLATE	1
K10-1-9	DFHR3469ZA	PEN FRICTION SHEET	1
K10-1-10	DFHR3E36ZA	SPEAKER WP SHEET	1
K10-1-11	DFHR6282ZA	PEN HOLDER	1
K10-1-12	DFKM0521ZA-0	FRONT CASE	1
K10-1-13	DRHM5025YAT	SCREW	4
K10-2	DFHE0805ZA	MAGNET	1
K10-3	DFHP7149ZA	MAGNET TAPE	1
K10-4	DFWV84A0276	TOUCH SCREEN PANEL KIT	1
K10-4-1	DL3DV0182AAA	TS PANEL ASS'Y	1
K10-4-1-1	DFHR9071ZA	PROTECTIVE FILM	1
K10-4-2	DFHR3630ZA	TS FPC SPACER	1
K10-4-3	DFHR3476ZA	TS SPACER A	2
K10-4-4	DFHR3477ZA	TS SPACER B	2
K10-4-5	DFHR3464WA	LCD SIDE CUSHION B TS	2
K11	DFWV80C0512	LCD REAR CABINET ASS'Y	1
K11-1 ⚠	DFKM9039ZA-0	LCD REAR ASSY	1
K11-1-1	DFHG1634YA-0	LCD CABINET CUSHION A	2
K11-1-2	DFHG1635ZA-0	LCD CABINET CUSHION B	2
K11-1-3	DFHM0319YA	LCD ELEPASS	2

Downloaded from www.Manualslib.com manuals search engine

K11-1-4	DFHM0321ZA	D WASHER	2
K11-1-5	DFHM0322ZA	SPRING WASHER	2
K11-1-6 ⚠	DFKM0522ZA-0	REAR CASE	1
K11-2	DFHR3566YA	LCD REAR CUSHION F	3
K11-3	DFHR3460YA	LCD REAR CUSHION A	2
K11-4	DFHR3567YA	LCD REAR CUSHION G	2
K11-5	DFHR3461YA	LCD REAR CUSHION B	2
K11-6	DFHR3563YA	LCD REAR CUSHION C	2
K11-7	DFHR3564YA	LCD REAR CUSHION D	1
K11-8	DFHR3565YA	LCD REAR CUSHION E	2
K11-9	DFGB0132ZA-0	TOUGH BOOK BADGE(SILVER)	1
K11-10	DFGB0131ZA-0	PANASONIC BADGE	1
K12 ⚠	DFKM9040ZA-0	TOP CASE ASSY	1
K12-1	DFHM0320YA	TOP ELEPASS	2
K12-2	DFHR3434ZA	AUDIO WATERPROOF SHEET	1
K12-3	DFHR3440ZA	DSUB WATERPROOF SHEET	2
K12-4	DFHR3470YA	PSW WATERPROOF SHEET	1
K12-5	DFHR3D86ZA	FS CASE WP SHEET	1
K12-6	DFHR3D94YA	GPS HOLE SHEET A	1
K12-7	DFHR3E15ZA	LAN WP SHEET	1
K12-8	DFHR3E16ZA	MODEM WP SHEET	1
K12-9	DFHR3F00ZA	1394 WP SHEET	1
K12-10	DFHR3F01ZA	USB BACK WP SHEET	2
K12-11	DFHR6276ZA-0	POWER SW KNOB	1
K12-12 ⚠	DFKM0519ZA-0	TOP CASE	1
K12-13 ⚠	DFKE9089ZA-0	BAT LID ASSY	1
K12-13-1	DFBH3030ZA	LID HINGE	2
K12-13-2	DFHM0315YC	LATCH PLATE BATTERY	1
K12-13-3	DFHR3466YA	LID KNOB SHEET	1
K12-13-4	DFHR3509YA	BAT COVER SHEET	1
K12-13-5 ⚠	DFKE0889ZA-0	LID KNOB	1
K12-13-6 ⚠	DFKE0891ZA-0	BAT LID	1
K12-13-7	DFUN0068XA	LID KNOB SPRING	1
K12-13-8	DFUS0292ZB	LID KNOB SPRING PLATE	1
K12-13-9	DRHM0109ZAT	SCREW	2
K12-13-10	DRQT26+D3KLT	SCREW	2
K12-13-11	DXQT2+F3FNLT	SCREW	1
K12-14 ⚠	DFKE9090ZA-0	HDD LID ASSY	1
K12-14-1	DFBH3030ZA	LID HINGE	2
K12-14-2	DFHM0285XC	LID LATCH PLATE	1
K12-14-3	DFHR3466YA	LID KNOB SHEET	1
K12-14-4	DFHR3508YA-0	HDD COVER SHEET	1
K12-14-5 ⚠	DFKE0889ZA-0	LID KNOB	1
K12-14-6 ⚠	DFKE0890ZA-0	HDD LID	1
K12-14-7	DFUN0068XA	LID KNOB SPRING	1
K12-14-8	DFUS0292ZB	LID KNOB SPRING PLATE	1
K12-15 ⚠	DFKE9091ZA-0	PCMCIA LID ASSY	1
K12-15-1	DFBH3030ZA	LID HINGE	2
K12-15-2	DFHM0285XC	LID LATCH PLATE	1
K12-15-3	DFHR3466YA	LID KNOB SHEET	1
K12-15-4	DFHR3588WA-0	PCMCIA COVER SHEET SD	1
K12-15-5 ⚠	DFKE0889ZA-0	LID KNOB	1
K12-15-6 ⚠	DFKE0890ZA-0	HDD LID	1
K12-15-7	DFUN0068XA	LID KNOB SPRING	1
K12-15-8	DFUS0292ZB	LID KNOB SPRING PLATE	1
K12-15-9	DRHM0109ZAT	SCREW	2
K12-15-10	DRHM5025YAT	SCREW	1
K12-15-11	DRQT26+D3KLT	SCREW	2
K12-16	DRQT26+D3KLT	SCREW	6

Downloaded from www.Manualslib.com manuals search engine

K12-17	DXQT3+F4FNLT	SCREW	2
K13 ⚠	DFKE9092ZA-0	TABLET LATCH ASSY	1
K13-1	DFHG1669ZA	TABLET LATCH SHEET	1
K13-2	DFHM0291ZA	TABLET LATCH PLATE	1
K13-3	DFHM0294WA	TABLET LATCH PIN	2
K13-4	DFHM0295ZA	TABLET LATCH SHAFT	1
K13-5 ⚠	DFKE0892ZA-0	TABLET LATCH KNOB	1
K13-6 ⚠	DFKE0893ZA-0	TABLET LATCH LEVER	1
K13-7	DFNW1604ZA	CUT WASHER	1
K13-8	DFUN0069XA	LATCH KNOB SPRING	1
K14 ⚠	DFKM9041ZA-0	BOTTOM CASE ASSY	1
K14-1	DFHM9016ZA-0	DIMM LID ASSY	1
K14-1-1	DFHM0401ZA-0	DIMM LID	1
K14-1-2	DFHR3E14ZA	DIMM LID WP SHEET	1
K14-2	DFHM0410ZA	DU LID ANGLE	1
K14-3	DFHR3441ZA	DU LID WATERPROOF SHEET	1
K14-4	DFHR3F64ZA	HDD BOTTOM SHEET	2
K14-5	DFHR6283ZA-0	DU LID	1
K14-6 ⚠	DFKM0518ZA-0	BOTTOM CASE	1
K14-7	DFUS0316ZA	PLATE SPRING GUIDE PIN	2
K14-8	DRHM5025YAT	SCREW	6
K14-9	DXQT2+D25FNL	SCREW	7
K15	DFHE1019YA	DU CONNECTOR SPONGE	1
K16	DFHG1209ZA	RUBER FOOT	4
K17	DFHG1633ZB-0	SERIAL LID RUBBER	1
K18	DFHG1638ZA-0	MODELAN LID RUBBER	1
K19	DFHG1639ZA-0	USB LID RUBBER	1
K20	DFHG1641ZB-0	RGB LID RUBBER	1
K21	DFHG1660ZA-0	LAN LID RUBBER	1
K22	DFHG1790ZA	BAT CUSHION	1
K23	DFHG1902ZA-0	DC-IN LID RUBBER	1
K24	DFHG1903ZA-0	1394 LID RUBBER	1
K25	DFHG1906ZA-0	AUDIO LID RUBBER	1
K26	DFHG1907YA-0	USB LID RUBBER 2	1
K27	DFHM0286YB	LID RUBBER PLATE A	1
K28	DFHM0288ZB	LID RUBBER PLATE C	2
K29	DFHM0296XA-0	LCD HINGE COVER(SILVER)	1
K30	DFHM0302XA-2	KEYBOARD PLATE(L) CF-19	1
K31	DFHM0303XA-0	KEYBOARD PLATE(R)	1
K32	DFHM0311ZB	LID RUBBER PLATE B	2
K33	DFHM0403ZA	DU CNT ANGLE	1
K34	DFHM0406ZA	KBD CNT LID	1
K35	DFHM0407ZA	BAT CON ANGLE	1
K36	DFHR3445ZA	HEAT DISSIPATION RUBBER	2
K37	DFHR3487YA	PORTRE SHEET	1
K38	DFHR3636ZA	CABLE HOLD SHEET	1
K39	DFHR3D91ZA	KB CNT LID WP SHEET	1
K40	DFHR3E03ZA	SD BLIND SHEET	1
K41	DFHR3E53ZA	FS SCREW SHEET	1
K42	DFHR3F62ZA	POWER SWITCH CABLE SHEET	1
K43	DFHR3G19ZA	INSULATION SHEET	2
K44	DFHR3G22ZA	PCMCIA SIDE SHEET	1
K45	DFHR6246ZA	HDD GUIDE	1
K46	DFHR6284ZA	DIMM HOLDER	1
K47	DFHR6286ZA-0	RF SW KNOB	1
K48	DFHR6289ZA	BAT CON HOLDER	1
K49	DFHR6290ZA-0	FS DUMMY CASE	1
K50	DFHR6312ZA	ANT CABLE HOLDER	1
K51	DFHR7946ZA	MP GUIDE SHEET	1

Downloaded from www.Manualslib.com manuals search engine

K52	DFHR9081ZA	PEN	1
K53	DFMC0870ZA	DU CONN SPRING PLATE	1
K54	DFMX0383TA	INSULATION PARTS	17
K55	DFMY0419ZA	DIMM THERMAL RUBBER	1
K56	DFMY0444YA	THERMAL RUBBER	1
K57	DFHE0915ZA	EMI SHEET 10X20	1
K58	DFHM0325ZA	CABLE HOLD PLATE	2
K59	DFHR3432ZA	ANT CABLE CUSHION	4
K60	DFHR3516ZA	PROTECT SHEET(SCREW)	1
K61	DFHR3573YA	LCD SIDE CUSHION E	2
K62	DFHR3574YA	LCD SIDE CUSHION F	1
K63	DFHR3638XA	DG TAPE	1
K64	DFHR3E21ZA	ANT DROP CUSHION 2	1
K65	DFHR3G16ZA	INSULATION SHEET 30X140	1
K66	DFHR3G42ZA	TAPE PEN HOLDER	1
K67	DFHR6081ZA-0	CABLE HOLDER	2
K68	DFHR6105XA-2	ANT COVER	2
K69	DFHR6279ZA-0	TABLET LATCH COVER	1
K70	DFHR6298ZA	HINGE CABLE HOLDER	1
K71	DFMC0685ZA	CONDUCTIVE SHEET, LCD	1
K72	DFMC0816ZA	INV MIL SHEET	1
K73	DFMC0877YA	INVERTER CASE	1
K74	DFMC0878ZA	INVERTER SHIELD SHEET	1
K76	DFMX1267ZA	INVERTER CASE(BASE)	1
K77	DFMX1268ZA	INVERTER CASE(LOWER)	1
K78	DFQT6077YA	CAUTION LABEL, LCD	1
K79	DFUQ0100ZA	LOCK SPRING	2
K80	DFWV99A0113	HDD MOUNTING KIT	1
K80-1	DFHM0404ZA	HDD CASE UPPER	1
K80-2	DFHM0416ZA	HDD CASE LOWER	1
K80-3	DFHR3589ZA	HDD CASE TAB	1
K80-4	DFHR3D89ZA	HDD DAMPER	1
K80-5	DFHR3F54ZA	HDD CON SHEET	1
K80-6	DFHR6297ZA	HDD CONNECTOR GUARD	1
K80-7	DL3UP1564AAA	HDD FPC UNIT	1
K80-8	DFMX0383TA	INSULATION PARTS	2
K80-9	DFMX1265ZA	INSULATION SHEET(HDD HEATER)	1
K80-10	DFMY3208ZA	THERMAL SHEET	1
K80-11 ⚠	L9DZYY000008	HEATER(HDD)	1
K81	DFQT0045ZA	ENERGY STAR LABEL	1
K82	DFQT0046ZA	VISTA CAPABLE LABEL	1
K83	DFQT9981ZA	CENTRINO DUO LABEL	1
K84	DFQX3999XA	OVERLAMINATE-LARGE	1
K85 ⚠	DFGT1094ZA	RATED LABEL	1
K86	DFHD04H004YB	HEXAGON SPACER H=4.2MM	2
K87	DFHR3F85ZA	MODEM CABLE SHEET	1
K88	DFMC0881ZA	BUSTERAID MODEM	2
K89	DFMY3235ZA	THERMAL DIFFUSION SHEET	2
K90	DFHM0309YA-1	SIM LOCK PLATE	1
K91	DFHR3G18ZA	BIS HEAD SHEET	1
K92	DFHR3G24ZA	BIS HEAD SHEET 2	1
K93	DFMY3224ZA	WLAN SHEET	1
K94	DFHM0412ZA	RF-BT PLATE	1
K95	DFHR3154ZA	LCD CABLE TAPE	2
K96	DFHR5484ZA	CLAMP	1
K98	DFHE0326XA	GASKET-65TSV10-4-15	1
K99	DFHE0811YA	GASKET-65TSV4-3-50	1
K100	DFHE1031ZA	GASKET-65TSV13-1.5-20	1
K101	DFHG1962ZA	POWER SPRING SHEET	1

Downloaded from www.Manualslib.com manuals search engine

K102	DFHP7200ZA	ADHENSIVE TAPE	1
K103	DFHP7256ZA	RF LED PWB TAPE	1
K104	DFHP7257ZA	LED PWB TAPE	1
K105	DFHP7279ZA	USB SCREW COVER ADHESIVE	1
K106	DFHR3049ZA	LCD DAMPER E	1
K107	DFHR3438ZA	CLICK BUTTON SHEET	1
K108	DFHR3483SA	OPERATION SHEET	1
K109	DFHR3583YA	KB WP SHEET	1
K110	DFHR3642YA	LCD CUSHION SHEET	2
K111	DFHR3643ZA	TP BOTTOM TAPE	1
K112	DFHR3655YA	HDD CASE SPACER	2
K113	DFHR3D90ZA	KB CNT HOLE CUSHION	1
K114	DFHR3D93ZA	TP WP SHEET	1
K115	DFHR3D97ZA	LED PWB TAPE	1
K116	DFHR3E02ZA	PALM REST WP SHEET R	1
K117	DFHR3E19ZA	LED SYAKOU SHEET	1
K118	DFHR3E34ZA	RF SYAKOU SHEET	1
K119	DFHR3F45ZA	BATTERY CUSHION	1
K120	DFHR3F55ZA	OPERATION TAPE	1
K121	DFHR3F65ZA	PC SHEET	2
K122	DFHR3F66ZB	PET SHEET	2
K123	DFHR3G40ZA	USB SCREW COVER SPACER	1
K124	DFHR6044XA	CLICK BUTTON PLATE	1
K125	DFHR6326ZA	USB SCREW COVER	1
K126	DFMD2182ZA	PLATE HEAT PIPE	1
K127	DFMD3125ZA	BACK PLATE KENSINGTON 2	1
K129	DFMY0278YA	THERMAL SHEET	1
K130	DFMY0447ZA	CPU HEAT PIPE RUBBER	1
K131	DFMY3208ZA	WLAN SHEET	1
K132	DFMY5039ZA	HEAT PIPE UNIT	1
K133	DFUQ0111ZA	POWER SW SPRING	1
K135	DFHR3591ZB	INSU SHEET CHIP SET	1
K136	DFHR3F61YA	COIN BATTERY FOOT SHEET	1
K137	DFMY3234ZA	THERMAL DIFFUSION SHEET	1
K138	DFHR7518ZA	H CABLE SHEET	1
K139	DFMX1277ZA	INSULATION SHEET	1
K140	DFHR3488ZA	ANTENNA SHEET	1
K141	DFHG429YA	IO DC TUBE	1
K142	DFHR3G38ZA	DIMM CUSHION	2
K143	DFHR3G39ZA	USB SCREW SPACER	1
K144	DFHP7270ZA	KB ADHESIVE TAPE	4
N1	DFHE5025XA	SCREW	33
N2	DFHE5058ZB	SCREW	4
N3	DFHE5108ZA	SCREW	4
N4	DRHM0112ZA	SCREW	2
N5	DRHM0115ZA	SCREW	2
N6	DRHM5025YA	SCREW	18
N7	DRQT26+E5FKL	SCREW	18
N8	DRSB2+10FKL	SCREW	2
N9	DRSB2+5FKL	SCREW	27
N10	DRHM0061ZA	SCREW	13
N11	DRYN3+J6FKL	SCREW	2
N13	DXQT2+D4FNL	SCREW	2
N14	DXQT3+D4FKNL	SCREW	2
N15	DXYN2+J6FNL	SCREW	10
N16	DXYN3+J10FNL	SCREW	2
N17	DXYN3+J8FNL	SCREW	2
N18	DXYN4+J7FNL	SCREW	4
N19	XSB2+3FNL	SCREW	17

Downloaded from www.Manualslib.com manuals search engine

Replacement Parts List

Note: Important Safety Notice
Components identified by⚠ mark have special characteristics important for safety.
When replacing any of these components use only manufacturer's specified parts.

CF-19CHBAXBM (2006/11/20)

REF. NO and AREA		PART NO.	DESCRIPTION	Q'TY
MAIN PCB				
C 1, 2, 3, 6, 7, 8, 10, 11, 12, 14, 15, 16, 18, 19, 20, 22, 23, 24, 27, 28, 29, 30, 31, 32, 33, 34, 35, 36, 37, 38, 39, 40, 43, 51, 52, 55, 59, 60, 62, 96, 98, 100, 102, 111, 113, 115, 117, 146, 176, 229, 257, 258, 260, 265, 266, 267, 274, 276,		F1J0J106A016	CAPACITOR, 6.3V, 10μF	64
C 4, 53, 57, 83, 151, 155		EEFCX0D221R	CAPACITOR, 2V, 220μF	6
C 5, 9, 13, 17, 21, 25, 45, 46, 47, 48, 49, 50, 54, 56, 58, 61, 63, 64, 65, 66, 67, 68, 69, 70, 71, 73, 80, 84, 90, 91, 92, 93, 97, 99, 101, 103, 106, 107, 108, 109, 112, 114, 116, 118, 140, 141, 142, 145, 147, 148, 150, 152, 153, 157, 158, 159, 160, 161, 162, 163, 164, 165, 166, 167, 168, 169, 170, 171, 172, 173, 174, 175, 177, 178, 186, 197, 203, 204, 214, 215, 216, 223, 224, 226, 227, 228, 230, 233, 237, 244, 247, 259, 264, 271, 272, 273, 275, 278, 281, 282, 286, 288, 294, 295, 296, 303, 304, 312, 315, 316, 321, 322, 323, 324, 325, 326, 327, 328, 339, 341, 344, 345, 346, 347, 351, 352, 354, 356, 357, 358,		F1G1C104A042	CAPACITOR, 16V, 0.1μF	149
C 41, 74, 75, 82, 120, 121, 194, 196, 240, 314		F1J0J4750019	CAPACITOR, 6.3V, 4.7μF	10
C 44, 350, 612, 678, 681, 686		F1G1H1010005	CAPACITOR, 50V, 100pF	6
C 72, 76, 77, 78, 79, 81, 85, 88, 95, 104, 119, 126, 127, 128, 129, 277, 279, 353		F1H0J1050022	CAPACITOR, 6.3V, 1μF	18
C 86, 87, 143, 154, 156, 184, 187, 189, 225, 231, 249, 250, 253, 254, 255, 256, 603, 690, 698, 799		F1H1A1050015	CAPACITOR, 10V, 1μF	20
C 122, 123, 124, 125, 144, 149, 179, 180, 181, 182, 188, 191, 192, 193, 207, 217, 218, 219, 222, 236, 245, 263, 268, 269, 305,		F1G1E103A062	CAPACITOR, 25V, 0.01μF	29
C 130, 131		F1G1H180A542	CAPACITOR, 50V, 18pF	2
C 136, 137, 138, 139, 290, 291, 292		F1G1A104A014	CAPACITOR, 10V, 0.1μF	7
C 183, 185		F1G1H6R0A544	CAPACITOR, 50V, 6.0pF	2
C 198		EEFUD0J151ER	CAPACITOR, 6.3V, 150μF	1

Downloaded from www.Manualslib.com manuals search engine

C 200, 235, 289, 293, 297, 302, 340, 342, 343, 616, 623, 639, 641, 643, 659, 677, 679, 680, 684, 802,		F1G1H102A496	CAPACITOR, 50V, 1000pF	22
C 241, 242		F1G1H150A542	CAPACITOR, 50V, 15pF	2
C 243, 804		F1J1E334A081	CAPACITOR, 25V, 0.33μF	2
C 246		F1G1H271A495	CAPACITOR, 50V, 270pF	1
C 261, 262, 619, 625, 637,		F1G1H221A495	CAPACITOR, 50V, 220pF	6
C 283, 285		F1G1H7R0A544	CAPACITOR, 50V, 7.0pF	2
C 287		F1L3D102A003	CAPACITOR, 2000V, 1000pF	1
C 299, 606, 613, 615, 622, 644, 658, 673, 676, 694, 695, 697, 699, 700		F1H1H104A748	CAPACITOR, 50V, 0.1μF	14
C 317, 318, 319, 320, 604		F1J1E105A009	CAPACITOR, 25V, 1μF	5
C 335, 338		F1G1A683A014	CAPACITOR, 10V, 0.068μF	2
C 431, 650, 651, 652, 806		EEFSX0D331ER	CAPACITOR, 2V, 330μF	5
C 608, 609		EEFCX0J101R	CAPACITOR, 6.3V, 100μF	2
C 611, 626, 648, 649, 654, 672, 687, 808		F1L1E106A017	CAPACITOR, 25V, 10μF	8
C 614, 624, 820, 821, 822, 823, 824, 825		F1H1H103A748	CAPACITOR, 50V, 0.01μF	8
C 617, 647		F1G1H470A542	CAPACITOR, 50V, 47pF	2
C 618, 657, 661		F1G1H471A496	CAPACITOR, 50V, 470pF	3
C 620, 660		F1G1H220A542	CAPACITOR, 50V, 22pF	2
C 621, 640, 646, 664, 682,		F1J0J475A009	CAPACITOR, 6.3V, 4.7μF	6
C 627		EEFCX0G151R	CAPACITOR, 2V, 150μF	1
C 632, 633, 634		F1G1C473A004	CAPACITOR, 16V, 0.047μF	3
C 638		F1G1H561A496	CAPACITOR, 50V, 560pF	1
C 645		F1H1H222A748	CAPACITOR, 50V, 2200pF	1
C 653, 671, 693		EEFCD0D101ER	CAPACITOR, 2V, 100μF	3
C 655, 683		F1H1C224A074	CAPACITOR, 16V, 0.22μF	2
C 656		F1H1H472A748	CAPACITOR, 50V, 4700pF	1
C 675		F1H1H182A748	CAPACITOR, 50V, 1800pF	1
C 685		F1H1E472A050	CAPACITOR, 25V, 4700pF	1
C 688		EEFCD0D151ER	CAPACITOR, 2V, 150μF	1
C 696		F1G1H152A496	CAPACITOR, 50V, 1500pF	1
C 701, 702, 703, 705		F1K1E1060001	CAPACITOR, 25V, 10μF	4
C 704		EEFCD0J470ER	CAPACITOR, 6.3V, 47μF	1
C 801		F1G1H151A495	CAPACITOR, 50V, 150pF	1
C 803		F1G1H331A496	CAPACITOR, 50V, 330pF	1
C 807		F1H1H1830001	CAPACITOR, 50V, 0.018μF	1
CF 1, 2, 3		D4CC1103A038	THERMISTOR	3
CN 2		K1MYL0B00003	CONNECTOR	1
CN 3, 904		K1KA02BA0014	CONNECTOR	2
CN 4		K1NAF0D00003	CONNECTOR	1
CN 5		K1KY42B00001	CONNECTOR	1
CN 6		K1FY104BA024	CONNECTOR, USB	1
CN 8		K1KA20AA0261	CONNECTOR	1
CN 9		K1MN24BA0133	CONNECTOR	1
CN 10		K1MYL0B00004	CONNECTOR	1
CN 11		K1MY52BA0190	CONNECTOR	1
CN 12		K1KA08AA0266	CONNECTOR	1
CN 14		K1KA02B00292	CONNECTOR	1
CN 15		K1MN30AA0058	CONNECTOR	1
CN 16		K1MN50AA0018	CONNECTOR	1
CN 17		K1KA20AA0184	CONNECTOR, BATT CABLE	1
CN 18		K1MN26AA0074	CONNECTOR	1
CN 20		K1MY04AA0041	CONNECTOR	1
CN 21		K1MN12BA0134	CONNECTOR	1

Downloaded from www.Manualslib.com manuals search engine

CN 22		K2HZ104B0014	CONNECTOR	1
CN 23		K1MY40A00001	CONNECTOR	1
CN 24		K1KY12A00005	CONNECTOR	1
CN 25		K1KYA0A00019	CONNECTOR	1
CN 27		K1MN40B00048	CONNECTOR	1
D 1, 2, 3, 8		MA2J72900L	DIODE	4
D 4		B0JDBE000002	DIODE	1
D 5, 600		B0JCPD000023	DIODE	2
D 6		B0KB00000044	DIODE	1
D 9, 10, 11		MA3J14700L	DIODE	3
D 601, 602, 603		B0ADDH000004	DIODE	3
D 604		MAZ81200ML	DIODE	1
D 605		MAZ81800ML	DIODE	1
D 606, 622		MA3S132E0L	DIODE	2
D 608		B0JCQD000001	DIODE	1
D 609, 611, 626, 629, 631,		B0JCMD000014	DIODE	6
D 610, 627, 630		B0JDAE000004	DIODE	3
D 612, 613, 615, 617, 618		MAZ80510ML	DIODE	5
D 616		MAZ80620ML	DIODE	1
D 619, 621		MA2S111-TX	DIODE	2
D 620		B2ABAM000002	DIODE	1
D 624		DEDRB081L20	DIODE	1
F 1	⚠	K5H502Z00003	FUSE, 5A, 32V	1
F 2, 3, 4, 5, 8	⚠	K5H202Z00005	FUSE, 2A, 32V	5
F 10, 800	⚠	K5H802300002	FUSE, 8A, 72V	2
F 11	⚠	K5H103300003	FUSE, 10A, 72V	1
IC 1		C2GBC0000314	CPU	1
IC 2		C1CB00002360	IC, CHIPSET	1
IC 3		C0JBZZ000388	IC, CLOCK GENERATOR	1
IC 4		C1DB00001541	IC, CHIPSET	1
IC 5		C1CB00002585	IC	1
IC 6		C1DB00001182	IC, LAN CONTROLLER	1
IC 7		C3EBCG000100	IC, EEPROM	1
IC 8		C1DB00001159	IC, PERIPHERAL LSI	1
IC 9		C0CBCBC00137	IC, REGULATOR	1
IC 10		C1CB00002540	IC, TEMPERATURE CENSOR IC	1
IC 11		C0DBZYY00017	IC	1
IC 12, 19		C0DBZYY00026	IC, USB POWER SW	2
IC 14		C0DBZYY00019	IC, POWER MANAGEMENT SWITCH	1
IC 15		C3EBDY000005	IC, EEPROM	1
IC 16		C0DBZYY00016	IC	1
IC 18, 32, 34, 35		C0JBAZ002422	IC, FET SWITCH	4
IC 20		C0ZBZ0000978	IC	1
IC 21, 22		C0JBAS000218	IC, LOGIC	2
IC 23, 24, 25		C0EBE0000460	IC	3
IC 26		C0EBH0000457	IC	1
IC 27		C2CBJA000003	IC, MICON	1
IC 30		C3FBLY000024	IC, SPI FLASH MEMORY	1
IC 31		C1CB00002268	IC, SECURITY CHIP	1
IC 33, 51, 52, 59		C0JBAA000348	IC, 1 GATE LOGIC	4
IC 41, 58		C0JBAE000306	IC,	2
IC 42		C1CB00002264	IC	1
IC 46		C0JBAA000362	IC, LOGIC	1
IC 50		C0JBAB000832	IC, LOGIC	1
IC 53		C0JBAC000363	GATE LOGIC	1
IC 54		C0JBAC000367	IC, LOGIC	1
IC 55, 56, 57, 800		C0JBAA000347	IC, 1 GATE LOGIC	4

Downloaded from www.Manualslib.com manuals search engine

IC 600		C0ABZA000047	IC, AMP	1
IC 601		C0ABBA000093	IC, OP AMP	1
IC 602		C0DBAYY00194	IC, DC/DC	1
IC 603		C0JBAD000236	IC, LOGIC	1
IC 604		C0JBAB000622	IC, 1 GATE LOGIC	1
IC 605		C0DBEFH00002	IC, REGULATOR	1
IC 606		C0CBCAC00161	IC	1
IC 607		C0EBE0000333	IC	1
IC 608		C0DBDJH00009	IC, LINER	1
IC 610, 611, 612		C0DBALH00003	IC	3
L 1, 3		G1C1R0MA0076	INDUCTOR	2
L 2		G1C91NM00001	INDUCTOR	1
L 4, 906		J0JJC0000015	INDUCTOR	2
L 6, 11, 12, 18, 19, 20, 21, 25, 27		J0MAB0000200	INDUCTOR	9
L 7, 10, 26		J0JHC0000074	INDUCTOR	3
L 13, 14, 15, 24		J0JDC0000045	INDUCTOR	4
L 600		DDAZS100MT3T	INDUCTOR	1
L 601		G1C100MA0106	INDUCTOR	1
L 602		G1CR56ZA0140	INDUCTOR	1
L 603		G1C2R8MA0022	INDUCTOR	1
L 605		G1C4R7MA0106	INDUCTOR	1
L 606		G1C4R7Z00013	INDUCTOR	1
L 607		G1A160H00001	INDUCTOR	1
PA 1, 2	⚠	D4FB1R100009	SWITCH	2
Q 1, 2, 644, 802		B1CFGD000023	TRANSISTOR	4
Q 3, 22, 24, 36, 37, 607, 612		B1GBCFNN0042	TRANSISTOR	7
Q 4, 39		B1GDCFNN0031	TRANSISTOR	2
Q 5, 8		B1MBDCA00004	TRANSISTOR	2
Q 6, 13, 20, 29, 40, 641, 642, 643, 646, 801, 804		B1GBCFJN0037	TRANSISTOR	11
Q 9, 10, 11, 21, 26, 28, 31, 33, 625		B1DHDC000028	TRANSISTOR	9
Q 12, 14, 15, 17, 18, 19		B1MBBCA00003	TRANSISTOR	6
Q 25, 27, 32, 617, 618, 619, 621, 623, 626		XP0421300L	TRANSISTOR	9
Q 30		B1DHFD000015	TRANSISTOR	1
Q 34, 35		B1CFFB000001	TRANSISTOR	2
Q 600, 601, 602		XP0421400L	TRANSISTOR	3
Q 603, 604, 606		B1CHRD000001	TRANSISTOR	3
Q 608, 634, 638		B1CFGD000003	TRANSISTOR	3
Q 609, 610, 637		B1MBEDA00017	TRANSISTOR	3
Q 616, 622		B1CHRC000009	FET	2
Q 631, 633, 639, 640, 800		B1DBGD000006	TRANSISTOR	5
Q 632, 803		B1DFGD000032	TRANSISTOR	2
Q 645		B1MBEDA00008	TRANSISTOR	1
R 1, 2, 24, 25, 38, 42, 43, 140, 141, 179, 180, 281, 283, 305, 306, 437		ERJ2GEJ102X	RESISTOR, 1/16W, 1KΩ	16
R 3		D1H85104A024	RESISTOR ARRAY	1
R 7, 8, 28, 30, 36		ERJ2RKF1000X	RESISTOR, 1/16W, 100Ω	5
R 9, 676, 685		ERJ2RKF1001X	RESISTOR, 1/16W, 1KΩ	3
R 10		ERJ2RKF2001X	RESISTOR, 1/16W, 2KΩ	1
R 12		ERJ2RKF51R0X	RESISTOR, 1/16W, 51Ω	1
R 13, 15		ERJ2RKF27R4X	RESISTOR, 1/16W, 27.4Ω	2
R 14, 16, 31, 32		ERJ2RKF54R9X	RESISTOR, 1/16W, 54.9Ω	4
R 18		ERJ2RKF68R0X	RESISTOR, 1/16W, 68Ω	1
R 19, 21		ERJ2GEJ560X	RESISTOR, 1/16W, 56Ω	2
R 20, 636, 712, 731		ERJ3GEYJ100V	RESISTOR, 1/16W, 10Ω	4

Downloaded from www.Manualslib.com manuals search engine

R 22		ERJ2RKF75R0X	RESISTOR, 1/16W, 75Ω	1
R 23		ERJ2GEJ240X	RESISTOR, 1/16W, 24Ω	1
R 26, 266, 609, 612, 613, 749		ERJ2GEJ562X	RESISTOR, 1/16W, 5.6KΩ	6
R 27, 29		ERJ2RKF2210X	RESISTOR, 1/16W, 221Ω	2
R 33, 34, 78, 132, 167		ERJ2RKF24R9X	RESISTOR, 1/16W, 24.9Ω	5
R 37		ERJ2RKF2000X	RESISTOR, 1/16W, 200Ω	1
R 44, 234, 318		ERJ2RKF1002X	RESISTOR, 1/16W, 10KΩ	3
R 45, 80, 96, 139, 142, 143, 149, 156, 173, 182, 197, 206, 207, 210, 223, 226, 229, 230, 233, 282, 287, 292, 293, 294, 298, 299, 319, 331, 339, 341, 343, 345, 347, 355, 356, 431, 432, 615, 635, 641, 695,		ERJ2GEJ103X	RESISTOR, 1/16W, 10KΩ	47
R 47, 97, 126, 128, 145, 146, 154, 161, 224, 240, 241, 265, 313, 320, 333, 349, 442, 443, 445, 604, 673, 674, 689, 693, 697, 699, 703, 706, 800, 812, 813,		ERJ2GE0R00X	RESISTOR, 1/16W, 0Ω	33
R 58, 107, 148, 171, 195, 196, 216, 262, 272, 314, 315, 316, 350, 602, 603, 657, 658, 662, 663, 664,		ERJ2GEJ101X	RESISTOR, 1/16W, 100Ω	22
R 66, 67		ERJ2RKF80R6X	RESISTOR, 1/16W, 80.6Ω	2
R 70, 71, 121, 289, 330, 337, 344		ERJ2GEJ330X	RESISTOR, 1/16W, 33Ω	7
R 72, 93, 101, 122, 124, 150, 307, 325, 326		D1H81034A024	RESISTOR ARRAY	9
R 73		ERJ2RKF1501X	RESISTOR, 1/16W, 1.5KΩ	1
R 74		ERJ2RKF2550X	RESISTOR, 1/16W, 255Ω	1
R 79		ERJ3GEYJ220V	RESISTOR, 1/16W, 22Ω	1
R 81, 82, 84, 85, 86, 88		D1HA56080001	RESISTOR ARRAY	6
R 83, 87, 242		D1H85604A024	RESISTOR ARRAY	3
R 89, 90, 91, 92, 152		ERJ2GEJ1R0X	RESISTOR, 1/16W, 1Ω	5
R 95, 221		D1H83304A024	RESISTOR ARRAY	2
R 100, 231, 632, 633, 645, 646, 708, 709, 727, 728,		ERJ2GEJ100X	RESISTOR, 1/16W, 10Ω	12
R 119, 159, 184, 186, 187, 188, 189, 190, 193, 194, 208, 209, 212, 213, 219, 227, 238, 256, 258, 261, 277, 278, 279, 280, 617, 619, 620, 621, 654, 656,		ERJ2GEJ104X	RESISTOR, 1/16W, 100KΩ	31
R 120		D1H84724A024	RESISTOR ARRAY	1
R 123, 174, 175, 176, 177, 286, 300, 301, 302, 303, 304, 308, 309, 321, 322,		DEARA8AJ103M	RESISTOR ARRAY	17
R 127, 129		ERJ2GEJ470X	RESISTOR, 1/16W, 47Ω	2
R 133		ERJ2RKF22R6X	RESISTOR, 1/16W, 22.6Ω	1
R 144, 203, 686		ERJ2GEJ471X	RESISTOR, 1/16W, 470Ω	3
R 153		ERJ3GEYJ121V	RESISTOR, 1/16W, 120Ω	1
R 157, 757		ERJ2GEJ472X	RESISTOR, 1/16W, 4.7KΩ	2
R 162		ERJ2GEJ203X	RESISTOR, 1/16W, 20KΩ	1
R 163		ERJ2GEJ106X	RESISTOR, 1/16W, 10MΩ	1
R 164, 271, 618, 660		ERJ2GEJ105X	RESISTOR, 1/16W, 1MΩ	4
R 169, 257		ERJ2GEJ334X	RESISTOR, 1/16W, 330KΩ	2
R 178, 220		D1H82204A024	RESISTOR, 1/16W, 22Ω	2
R 198		ERJ2GEJ181X	RESISTOR, 1/16W, 180Ω	1
R 199, 200, 201, 202, 204, 205, 351, 352, 353, 799		ERJ2GEJ221X	RESISTOR, 1/16W, 220Ω	10
R 243		ERJ2GEJ512X	RESISTOR, 1/16W, 5.1KΩ	1
R 264		ERJ2RHD562X	RESISTOR, 1/16W, 5.6KΩ	1

Downloaded from www.Manualslib.com manuals search engine

R 267, 268, 269, 270		ERJ2RKF49R9X	RESISTOR, 1/16W, 49.9Ω	4
R 273		EXBV8V750JV	RESISTOR ARRAY	1
R 274, 275, 276, 640, 666,		ERJ2GEJ223X	RESISTOR, 1/16W, 22KΩ	6
R 284, 285		D1H81024A024	RESISTOR ARRAY	2
R 290, 291		ERJ2GEJ222X	RESISTOR, 1/16W, 2.2KΩ	2
R 311, 317, 436		ERJ2RKF3901X	RESISTOR, 1/16W, 3.9KΩ	3
R 312		ERJ2RKF5602X	RESISTOR, 1/16W, 56KΩ	1
R 430, 700, 803, 804		ERJ3GEY0R00V	RESISTOR, 1/16W, 0Ω	4
R 441		ERJ6GEYJ101V	RESISTOR, 1/10W, 100Ω	1
R 601		D1ZZ00000046	RESISTOR, 1W, 5mΩ	1
R 605, 608		ERJ2RHD103X	RESISTOR, 1/16W, 10KΩ	2
R 606, 611, 688		ERJ2RKF1003X	RESISTOR, 1/16W, 100KΩ	3
R 607, 610		ERJ2RKF1503X	RESISTOR, 1/16W, 150KΩ	2
R 614		ERJ3GEYJ3R3V	RESISTOR, 1/16W, 3.3Ω	1
R 616, 630, 670		ERJ2GEJ473X	RESISTOR, 1/16W, 47KΩ	3
R 622, 623		D1BDR1000002	RESISTOR, 1/8W, 0.1Ω	2
R 624		D1BDR0680001	RESISTOR, 1/8W, 0.068Ω	1
R 625		ERJ2RKF1102X	RESISTOR, 1/16W, 11KΩ	1
R 627		ERJ2RKF1302X	RESISTOR, 1/16W, 13KΩ	1
R 628, 629, 704, 705, 726, 743, 801		D1BDR0220001	RESISTOR, 1/8W, 0.022Ω	7
R 631, 741, 747, 802, 810		ERJ2GEJ474X	RESISTOR, 1/16W, 470KΩ	5
R 634, 710, 729		ERJ2GEJ153X	RESISTOR, 1/16W, 15KΩ	3
R 637		ERA3YEB622V	RESISTOR, 1/16W, 6.2KΩ	1
R 638, 754, 755		ERA3YKB104V	RESISTOR, 1/16W, 100KΩ	3
R 639, 733		ERA3YEB203V	RESISTOR, 1/16W, 20KΩ	2
R 642		ERA3YEB303V	RESISTOR, 1/16W, 30KΩ	1
R 643		ERA3YEB103V	RESISTOR, 1/16W, 10KΩ	1
R 644		ERA3YEB471V	RESISTOR, 1/16W, 470Ω	1
R 647, 648, 725, 742, 744,		D1BDR0330001	RESISTOR, 1/8W, 0.033Ω	6
R 653		ERJ2GEJ684X	RESISTOR, 1/16W, 680KΩ	1
R 655		ERJ2GEJ225X	RESISTOR, 1/16W, 2.2MΩ	1
R 667, 807		ERJ6GEYJ122V	RESISTOR, 1/10W, 1.2KΩ	2
R 668, 669		ERJ6GEYJ222V	RESISTOR, 1/10W, 2.2KΩ	2
R 678		ERJ2RKF1800X	RESISTOR, 1/16W, 180Ω	1
R 681		ERJ2RKF4702X	RESISTOR, 1/16W, 47KΩ	1
R 682		ERJ2RKF6801X	RESISTOR, 1/16W, 6.80KΩ	1
R 683		ERJ2RKF5103X	RESISTOR, 1/16W, 510KΩ	1
R 684, 690, 696		ERJ3GEYJ1R0V	RESISTOR, 1/16W, 1Ω	3
R 691		ERJ2RHD222X	RESISTOR, 1/16W, 2.2KΩ	1
R 692, 922		ERJ2RKF5101X	RESISTOR, 1/16W, 5.1KΩ	2
R 694		ERJ2RKF3001X	RESISTOR, 1/16W, 3KΩ	1
R 698		ERJ3GEYJ101V	RESISTOR, 1/16W, 100Ω	1
R 701		D1ZZ00000093	RESISTOR, 1W, 1mΩ	1
R 713		ERJ2RKF4701X	RESISTOR, 1/16W, 4.7KΩ	1
R 714, 737		ERJ2RKF1502X	RESISTOR, 1/16W, 15KΩ	2
R 732		ERA3YEB621V	RESISTOR, 1/16W, 620Ω	1
R 734, 808		ERA3YEB243V	RESISTOR, 1/16W, 24KΩ	2
R 738		ERJ2RHD123X	RESISTOR, 1/16W, 12KΩ	1
R 746		ERJ2RKD114X	RESISTOR, 1/16W, 110KΩ	1
R 748		ERJ2RHD3652X	RESISTOR, 1/16W, 36.5KΩ	1
R 750		ERJ2GEJ154X	RESISTOR, 1/16W, 150KΩ	1
R 751, 752		ERJ2RHD302X	RESISTOR, 1/16W, 3KΩ	2
R 756, 809		ERA3YEB333V	RESISTOR, 1/16W, 33KΩ	2
R 806		ERJ3GEYJ562V	RESISTOR, 1/16W, 5.6KΩ	1
SW 2		K0D112B00071	SW	1
T 1		G5BYC0000015	TRANCE	1

Downloaded from www.Manualslib.com manuals search engine

X 1		H0J143500058	OSCILLATOR, 14.318MHz	1
X 2		H0J327200115	OSCILLATOR, 32.768KHz	1
X 3		H0J245500083	XTAL	1
X 4		H0J250500076	XTAL	1
X 5		H2D800400015	OSCILLATOR, 8MHz	1
ZA 1, 2, 5, 6, 7, 10, 11		K1YGZZ000060	SPACER	7
AUDIO PCB				
C 900, 905, 910, 942, 943, 944, 945		F1H1A1050015	CAPACITOR, 10V, 1μF	7
C 901, 902, 903, 907, 908, 912, 915, 918, 919, 929,		F1G0J224A001	CAPACITOR, 6.3V, 0.22μF	11
C 906		F1J0J4750019	CAPACITOR, 6.3V, 4.7μF	1
C 909		F1G1E103A062	CAPACITOR, 25V, 0.01μF	1
C 911, 922, 934, 935, 936, 938, 939		F1J0J106A016	CAPACITOR, 6.3V, 10μF	7
C 913		F1G1H221A495	CAPACITOR, 50V, 220pF	1
C 914, 920, 921, 937		F1G1C104A042	CAPACITOR, 16V, 0.1μF	4
C 923, 924		F1G1H102A496	CAPACITOR, 50V, 1000pF	2
C 926, 931, 947		F1G1H1010005	CAPACITOR, 50V, 100pF	3
C 927, 930		F1G1H471A496	CAPACITOR, 50V, 470pF	2
C 928, 933		F1G1A104A014	CAPACITOR, 10V, 0.1μF	2
C 940, 941		F1H1A474A028	CAPACITOR, 10V, 0.47μF	2
CN 901		K1MN40B00048	CONNECTOR	1
CN 902		K1MN12BA0134	CONNECTOR	1
F 902	⚠	K5H202Z00005	FUSE, 2A, 32V	1
IC 900		C1CB00002449	IC, AUDIO CODEC	1
IC 901		C0CBCBC00130	IC, REGURATOR	1
IC 902		C0JBAE000306	IC,	1
IC 903		C0JBAS000251	IC	1
IC 904		C0ABBA000093	IC, OP AMP	1
IC 905		AN12945A-VB	IC, AUDIO AMP	1
KJ 901, 902		K2HC103B0197	JACK	2
KJ 903		K1QZA1AE0001	CONNECTOR	1
L 900, 901, 904, 905, 907		J0JCC0000286	INDUCTOR	5
L 902, 903		J0MAB0000174	INDUCTOR	2
Q 900, 905, 906		B1GBCFNN0042	TRANSISTOR	3
Q 902		XP0421300L	TRANSISTOR	1
Q 903, 904		B1CFGD000023	TRANSISTOR	2
Q 907		B1GDCFNN0031	TRANSISTOR	1
R 900, 904, 907, 909, 913, 920, 921, 929, 931, 936, 942, 943, 948		ERJ2GEJ103X	RESISTOR, 1/16W, 10KΩ	13
R 902		ERJ2GEJ330X	RESISTOR, 1/16W, 33Ω	1
R 903, 930, 934		ERJ2GEJ222X	RESISTOR, 1/16W, 2.2KΩ	3
R 905, 910, 925		ERJ2GEJ472X	RESISTOR, 1/16W, 4.7KΩ	3
R 906, 911		ERJ2GEJ390X	RESISTOR, 1/16W, 39Ω	2
R 912		ERJ2GEJ473X	RESISTOR, 1/16W, 47KΩ	1
R 915, 916		ERJ2RKF1003X	RESISTOR, 1/16W, 100KΩ	2
R 918, 919, 926, 928, 932, 933, 946		ERJ2GEJ104X	RESISTOR, 1/16W, 100KΩ	7
R 923, 927, 935, 937		ERJ2GEJ102X	RESISTOR, 1/16W, 1KΩ	4
R 924		ERJ2GEJ471X	RESISTOR, 1/16W, 470Ω	1
R 939		ERJ3GEY0R00V	RESISTOR, 1/16W, 0Ω	1
R 940		ERJ2RHD3922X	RESISTOR, 1/16W, 39.2KΩ	1
R 941		ERJ2RHD203X	RESISTOR, 1/16W, 20KΩ	1
R 945		ERJ2RKF1602X	RESISTOR, 1/16W, 16KΩ	1
R 947, 949		ERJ2RKF1002X	RESISTOR, 1/16W, 10KΩ	2
IO PCB				
C 880		F1H1H104A748	CAPACITOR, 50V, 0.1μF	1

Downloaded from www.Manualslib.com manuals search engine

C 883		F1L1E106A017	CAPACITOR, 25V, 10μF	1
C 884, 885, 886, 887, 888, 889, 890		F1G1H330A542	CAPACITOR, 50V, 33pF	7
C 891		F1G1C104A042	CAPACITOR, 16V, 0.1μF	1
C 892, 893		EZASCE101M	CAPACITOR ARRAY	2
CH 883	⚠	DFJS1063ZA	I/O DC CABLE	1
CN 880		K1MN24AA0058	CONNECTOR	1
CN 881		K1FA209BA004	CONNECTOR	1
CN 882		K1FB115BA014	CONNECTOR	1
D 881		MA2J72900L	DIODE	1
D 902		B0JDBE000002	DIODE	1
D 880		B0JCPD000023	DIODE	1
KJ 880	⚠	K2EEYB000001	JACK	1
L 880		J0JKC0000007	INDUCTOR	1
L 881, 882, 883, 884, 885, 886, 887		J0JCC0000186	INDUCTOR	7
PA 880	⚠	D4FB1R100009	SWITCH	1
Q 898		B1CHRD000001	TRANSISTOR	1
Q 899		B1DBGD000006	TRANSISTOR	1
R 881		D1BDR4700001	RESISTOR, 1/8W, 0.47Ω	1
R 882, 883, 884		ERJ2RKF75R0X	RESISTOR, 1/16W, 75Ω	3
R 885, 886		ERJ2GEJ222X	RESISTOR, 1/16W, 2.2KΩ	2
PAD PCB				
C 800, 801		F1G1H681A496	CAPACITOR, 50V, 680pF	2
C 802		F1G1E103A062	CAPACITOR, 25V, 0.01μF	1
C 803, 804, 806		F1G1C104A042	CAPACITOR, 16V, 0.1μF	3
C 805		F1J0J106A016	CAPACITOR, 6.3V, 10μF	1
CN 800		K1MY04BA0104	CONNECTOR	1
CN 801		K1MN06BA0134	CONNECTOR	1
CN 802		K1MY40A00001	CONNECTOR	1
CN 803, 805		K1MN08AA0068	CONNECTOR	2
CN 804, 807		K1KA02BA0014	CONNECTOR	2
CN 806		K1MN10BA0134	CONNECTOR	1
F 800	⚠	K5H202Z00005	FUSE, 2A, 32V	1
IC 800		C0EBE0000460	IC	1
IC 801		C1DB00001417	IC, FLAT PAD CONTROLLER	1
Q 800, 801		B1GKCFJN0004	TRANSISTOR	2
R 800		ERJ2GEJ273X	RESISTOR, 1/16W, 27KΩ	1
R 801, 802		ERJ2GEJ822X	RESISTOR, 1/16W, 8.2KΩ	2
R 803		ERJ2GEJ105X	RESISTOR, 1/16W, 1MΩ	1
R 804, 805		ERJ2GEJ222X	RESISTOR, 1/16W, 2.2KΩ	2
RA 800		D1H81034A024	RESISTOR ARRAY	1
SW 800, 801		K0ZZ00000618	SW	2
SW 802, 803		EVQPLDA15	SWITCH	2
X 800		H2D400400012	OSCILLATOR, 4MHz	1
SW PCB				
CN 950		K1MN08AA0068	CONNECTOR	1
LD 951		B3ABB0000210	DIODE	1
SW 950, 951, 952, 953, 954,		EVQPLDA15	SWITCH	6
LED-LEFT PCB				
CN 841		K1MN10AA0058	CONNECTOR	1
LD 841, 842, 843, 844, 845,		B3ABB0000210	DIODE	6
PR PCB				
C 851, 852, 854		F1J1A1050021	CAPACITOR, 10V, 1μF	3
C 855, 856, 857		J0MAB0000146	INDUCTOR	3
CA 851, 852, 854, 857, 858,		J0HABC000004	CAPACITOR ARRAY	6
CN 850		K1KYA0A00018	CONNECTOR	1

Downloaded from www.Manualslib.com manuals search engine

CN 851		K1KAA0AA0244	CONNECTOR	1
L 852, 853		J0JJC0000015	INDUCTOR	2
L 850		J0MAB0000200	INDUCTOR	1
LED-RIGHT PCB				
CN 780		K1MN06AA0058	CONNECTOR	1
LD 781		B3AGB0000040	DIODE	1
LD 782		B3ADB0000065	DIODE	1
LD 783		B3ABB0000210	DIODE	1
SD PCB				
C 890		F1G1C104A042	CAPACITOR, 16V, 0.1μF	1
C 891		F1G1H330A542	CAPACITOR, 50V, 33pF	1
CN 890		K1NA09E00076	CONNECTOR	1
CN 891		K1MN12BA0134	CONNECTOR	1
LD 890		B3ACB0000020	DIODE	1
R 891		ERJ2GE0R00X	RESISTOR, 1/16W, 0Ω	1
R 892		ERJ2GEJ103X	RESISTOR, 1/16W, 10KΩ	1
HSDPA PCB				
C 600, 603		F1G1H1010005	CAPACITOR, 50V, 100pF	2
C 601, 602, 604, 608		F1J0J106A016	CAPACITOR, 6.3V, 10μF	4
C 609, 610, 619		EEFUD0J151ER	CAPACITOR, 6.3V, 150μF	3
C 611, 612, 613, 614, 615, 616, 617, 620		F1G1C104A042	CAPACITOR, 16V, 0.1μF	8
C 622		F1G1H221A495	CAPACITOR, 50V, 220pF	1
CN 600		K1MN50BA0153	CONNECTOR	1
CN 601		K1MY52BA0190	CONNECTOR	1
CN 602		K1NA08E00006	CONNECTOR	1
CN 603		K1FY104BA024	CONNECTOR, USB	1
CN 604		K1MN10BA0134	CONNECTOR	1
D 600		B0KB00000044	DIODE	1
D 603		DEDRB081L20	DIODE	1
IC 600		C0JBAZ002422	IC, FET SWITCH	1
IC 601		C0JBAC000382	IC, LOGIC	1
IC 602		C0DBAYY00204	IC, DC/DC CONVERTER	1
IC 603		C0DBZGD00016	IC	1
IC 604		C0DBZYY00026	IC, USB POWER SW	1
IC 605		C0EBE0000460	IC	1
KJ 600, 601		K1QZA1AE0001	CONNECTOR	2
L 600, 601		J0JJC0000015	INDUCTOR	2
L 602		J0MAB0000200	INDUCTOR	1
L 603		G1C2R7MA0273	INDUCTOR, COIL	1
Q 600		B1DHFD000015	TRANSISTOR	1
Q 602, 604		B1GBCFNN0042	TRANSISTOR	2
Q 603		B1CFGD000023	TRANSISTOR	1
R 600		D1BDR0330001	RESISTOR, 1/8W, 0.033Ω	1
R 601		D1BDR0470002	RESISTOR, 1/8W, 0.047Ω	1
R 602, 606, 609, 615, 616		ERJ2GEJ103X	RESISTOR, 1/16W, 10KΩ	5
R 603, 613		ERJ2GE0R00X	RESISTOR, 1/16W, 0Ω	2
R 604, 611, 612, 619		ERJ2GEJ101X	RESISTOR, 1/16W, 100Ω	4
R 608		ERJ2RKF1001X	RESISTOR, 1/16W, 1KΩ	1
R 610		ERJ6GEY0R00V	RESISTOR, 1/10W, 0Ω	1
R 617		ERJ2RKF1002X	RESISTOR, 1/16W, 10KΩ	1
R 618		ERA3YEB303V	RESISTOR, 1/16W, 30KΩ	1
R 621, 622		ERJ2GEJ104X	RESISTOR, 1/16W, 100KΩ	2
SW 600		K0D444A00041	SWTICH	1
ZA 600, 601		K1YGZZ000060	SPACER	2
POWER SW PCB				
CN 980		K1KA02AA0262	CONNECTOR	1

Downloaded from www.Manualslib.com manuals search engine

SW 980		K0D112A00096	SW	1
TS PCB				
C 900, 901, 902, 903		F1G1E472A062	CAPACITOR, 25V, 4700pF	4
C 904, 905, 906, 907		F1G1H681A496	CAPACITOR, 50V, 680pF	4
C 908, 911, 912		F1G1C104A042	CAPACITOR, 16V, 0.1μF	3
C 909		F1G1E223A062	CAPACITOR, 25V, 0.022μF	1
C 910		F1G1H102A496	CAPACITOR, 50V, 1000pF	1
C 913, 916		F1J0J106A016	CAPACITOR, 6.3V, 10μF	2
C 914		F1G0J224A001	CAPACITOR, 6.3V, 0.22μF	1
CN 900		K1MN04B00073	CONNECTOR	1
CN 901		K1KA06BA0014	CONNECTOR	1
IC 900		C0EBE0000460	IC	1
IC 902		C1CB00002515	IC, TOUCHPANEL CONTROLLER	1
Q 900, 901		XP0431400L	TRANSISTOR	2
Q 902		B1GDCFNN0031	TRANSISTOR	1
R 900, 903, 905, 909, 911, 912, 917, 918, 922, 923		ERJ2GEJ102X	RESISTOR, 1/16W, 1KΩ	10
R 906, 930		ERJ2GEJ473X	RESISTOR, 1/16W, 47KΩ	2
R 908		ERJ2GEJ273X	RESISTOR, 1/16W, 27KΩ	1
R 913, 914, 915, 916		ERJ2GEJ822X	RESISTOR, 1/16W, 8.2KΩ	4
R 919, 925		ERJ2GE0R00X	RESISTOR, 1/16W, 0Ω	2
R 926		DEARA8AJ473M	RESISTOR ARRAY	1
R 927, 928		ERJ2GEJ270X	RESISTOR, 1/16W, 27Ω	2
R 929		ERJ2GEJ152X	RESISTOR, 1/16W, 1.5KΩ	1
X 900		H2D600400005	OSCILLATOR, 6MHz	1
EXTENAL ANTENNA PCB				
CN 1		K1QZB2AA0002	COAXIAL CONNECTOR	1
CN 2, 3, 4, 5		K1QZA1AE0001	CONNECTOR	4
BLUETOOTH PCB				
C 1		F1J0J106A016	CAPACITOR, 6.3V, 10μF	1
C 2, 4, 7, 11		F1G1C104A042	CAPACITOR, 16V, 0.1μF	4
C 3, 5		F1G1H102A496	CAPACITOR, 50V, 1000pF	2
C 6, 9		F1G1E103A062	CAPACITOR, 25V, 0.01μF	2
C 8		F1G1H270A542	CAPACITOR, 50V, 27pF	1
CN 1		K1MN10BA0070	CONNECTOR	1
IC 1		C0JBAZ002422	IC, FET SWITCH	1
IC 2	⚠	N5HZZ0000040	BLUETOOTH MODULE	1
IC 3		C0EBE0000460	IC	1
KJ 1		K1QZA1AE0001	CONNECTOR	1
L 1, 2		J0JJC0000015	INDUCTOR	2
L 4		G1C5N6ZA0029	INCUCTOR	1
L 5		J0MAB0000200	INDUCTOR	1
Q 1		B1GBCFJN0037	TRANSISTOR	1
Q 2		B1DHDC000028	TRANSISTOR	1
R 1, 2		ERJ2GEJ104X	RESISTOR, 1/16W, 100KΩ	2
HDD FPC				
CF 1		D4CC1103A038	THERMISTOR	1
CN 1		K1KY42A00001	CONNECTOR	1
CN 2		K1KY22A00001	CONNECTOR	1
CN 3		K1KA04BA0014	CONNECTOR	1
BATTERY FPC				
CN 1		K1KY10B00010	CONNECTOR	1

Downloaded from www.Manualslib.com manuals search engine