HP StorageWorks

Ultrium Half-Height SAS Tape Drives

User Guide

Part number: EH957-90905
Fourth edition: November 2009

Legal and notice information

© Copyright Hewlett-Packard Development Company, L.P.

The information contained herein is subject to change without notice. The only warranties for HP products and services are set forth in the express warranty statements accompanying such products and services. Nothing herein should be construed as constituting an additional warranty. HP shall not be liable for technical or editorial errors or omissions contained herein.

Linear Tape-Open LTO, the LTO Logo, Ultrium and the Ultrium Logo are registered trademarks of HP, IBM and Quantum in the US and other countries.

Microsoft, Windows, Windows XP, and Windows NT are U.S. registered trademarks of Microsoft Corporation.

UNIX is a registered trademark of The Open Group.

Contents

About this guide 9
Intended audience 9
Related documentation 9
Document conventions and symbols 9
HP technical support 10
Product warranties 10
Registering your tape drive 11
Subscription service 11
HP websites 11
Documentation feedback 11

1 Before you start 13
Your HP StorageWorks tape drive 13
Which operating systems are supported? 14
Power specifications 14
How do I connect the drive to my server? 14
Refer to www.hp.com/go/connect 14
Internal drives 14
External drives 16
Rackmount drives 16
Using the HP StorageWorks Tape CD-ROM 16

2 Drivers and backup software 17
Install drivers 17
Installing on Windows 17
Installing on Linux and UNIX 17
Installing on IA64 17
Upgrade backup software 18
Enabling encryption 18

3 Installing an internal Ultrium tape drive 19
Before you start 19
Mounting requirements 20
Remove server cover - all servers 21
Attach mounting hardware - some servers 21
HP ProLiant servers 22
Mounting rails 22
Mounting screws 22
Other servers 23
Install drive - all servers 23
Connect SAS and power cords 24
Supplied SAS cable 24
Option 1: Connect to a new HBA (all servers) 26
Option 2: Connect cable to spare port on host SAS controller 28

Option 3: Connect cable to port on host SAS controller and replace existing SAS cable 31
Secure the drive - all servers 35
Mounting hardware used 35
No mounting hardware used 36
Reboot the server 36

4 Installing an external Ultrium tape drive 37
Before you start 37
Connecting the tape drive to an external SAS port 38
Reboot the server 39

5 Verify installation 41

6 Operating your tape drive 43
Your HP StorageWorks tape drive 43
HP StorageWorks LTO-5 Ultrium tape drives 43
All other Ultrium tape drives 43
Loading a cartridge 45
Unloading a cartridge 45
Removing power from the drive 46

7 Use the correct media 47
Cartridges 47
Cleaning cartridges 47
Data cartridges 47
HP Ultrium WORM data cartridges 48
Ultrium LTO-5 tape drives and partitioning 49
Ultrium LTO-5 and LTO-4 tape drives and encryption 49
When should I use encryption? 49
How do I enable encryption? 49
When will I be asked to enter the key? 50
What happens if I don't remember the key? 50
Does encryption affect tape drive performance? 50
Does the tape drive encrypt media in an earlier Ultrium format? 50
Where can I get more information? 50
Write protecting cartridges 51
Cleaning the tape drive 52
Handling cartridges 52
Operating and storage environment 52

8 Using HP OBDR 53
Compatibility 53
What does HP OBDR do? 53
Remote disaster recovery (ProLiant servers only) 54
Testing for compatibility 54
Running HP OBDR 54
If restore fails 55

9 Diagnostic Tools and Performance 57
HP TapeAssure 57
HP Library & Tape Tools 57
Troubleshooting with Library & Tape Tools 57

Performance Assessment Tools 58
Optimizing performance 58
Can your system deliver the required performance? 58

10 Troubleshooting 61
General Procedure 61
Understanding LED sequences 63
Encryption LED, Ultrium 3000 models only 65
Problems with cartridges 66
The cartridge is jammed 66
The drive will not accept the cartridge (or ejects it immediately) 68
Encryption troubleshooting 69

11 Replacing a tape drive 71
To disconnect your drive 71
To reconnect your tape drive 71

Index 73

Figures

1 Front view of Ultrium external tape drive 13
2 SAS with power cable supplied with Ultrium 3000 internal tape drives 15
3 SAS without power cable supplied with Ultrium 1760, 920 and 448 internal tape drives 15
4 SAS cable supplied with external tape drives 16
5 Decision tree for connecting an internal tape drive to an internal SAS port 20
6 Attaching mounting rails 22
7 Attaching locating screws in a typical HP ProLiant ML350 or ML370 23
8 Installing tape drive 24
9 SAS cable supplied with LTO-5 Ultrium 3000 tape drives 25
10 SAS cable supplied with all other Ultrium tape drives 25
11 Cabling to a new HBA 26
12 Connecting cables to the Ultrium 3000 tape drive 27
13 Connecting cables to all other LTO tape drives 27
14 Cabling to the spare SAS port (some HP ProLiant servers) 29
15 Connecting cables to the Ultrium 3000 tape drive 30
16 Connecting cables to all other LTO tape drives 30
17 Removing the existing SAS cable 32
18 Cable routing with replacement SAS cable 33
19 Connecting cables to the Ultrium 3000 tape drive 34
20 Connecting cables to all other LTO tape drives 34
21 Securing drive, mounting hardware used 35
22 Securing drive, no mounting hardware used 36
23 Supplied SAS external cable (connect to external port) 37
24 Connecting the SAS cable to the server 38
25 Connecting the cables to the tape drive 39
26 Front view of Ultrium 3000 external tape drive 43
27 Front view of earlier Ultrium external tape drives 44
28 Inserting a cartridge 45
29 Ejecting a cartridge 46
30 Write protecting a cartridge 51
31 Inserting cartridge for OBDR 54

32 Powering on in OBDR mode 55
33 Front view of Ultrium 3000 external tape drive 63

Tables

1 Document conventions 9
2 Power specifications for Ultrium half-height tape drives 14
3 Data cartridge compatibility 48
4 Environmental specifications for Ultrium tape drives 62
5 Clean, Tape, Drive and Ready LED sequences 63
6 Encryption LED, Ultrium 3000 tape drives 65
7 Data cartridge compatibility 68

About this guide

This guide provides information about:

- Installing the HP StorageWorks Ultrium SAS half-height tape drive
- Using the HP StorageWorks Ultrium SAS half-height tape drive
- Troubleshooting the HP StorageWorks Ultrium SAS half-height tape drive

Intended audience

This guide is intended for users who install, operate and maintain the HP StorageWorks Ultrium half-height tape drive.

Related documentation

In addition to this guide, the following document provides related information:

- 'Start here' poster for an overview of the installation information in this guide (available in English, French, German and Japanese)
- Beginners' Guide to SAS

You can find these documents from the Manuals page of the HP Business Support Center website:

http://www.hp.com/support/manuals

In the Storage section, click **Tape Storage and Media** and then select your product.

Document conventions and symbols

Table 1 Document conventions

Convention	Element
Blue text: Table 1 on page 9	Cross-reference links and e-mail addresses
Blue, underlined text: http://www.hp.com	website addresses
Bold text	• Keys that are pressed • Text typed into a GUI element, such as a box • GUI elements that are clicked or selected, such as menu and list items, buttons, tabs, and check boxes
Italic text	Text emphasis

Convention	Element
`Monospace` text	• File and directory names • System output • Code • Commands, their arguments, and argument values
`Monospace, italic` text	• Code variables • Command variables
`Monospace, bold` text	Emphasized monospace text

⚠ WARNING!

Indicates that failure to follow directions could result in bodily harm or death.

△ CAUTION:

Indicates that failure to follow directions could result in damage to equipment or data.

IMPORTANT:

Provides clarifying information or specific instructions.

NOTE:

Provides additional information.

HP technical support

For worldwide technical support information, see the HP support website:

http://www.hp.com/support

Before contacting HP, collect the following information:

- Product model names and numbers
- Technical support registration number (if applicable)
- Product serial numbers
- Error messages
- Operating system type and revision level
- Detailed questions

Product warranties

For information about HP StorageWorks product warranties, see the warranty information website:

http://www.hp.com/go/storagewarranty

Registering your tape drive

Once you have installed and tested your HP StorageWorks Ultrium tape drive, please take a few minutes to register your product on the following website:

http://www.register.hp.com

To ensure your registration is complete, there are a number of questions on the electronic form that are mandatory. Other questions are optional. However, the more you feel able to complete, the better HP can meet your needs.

Subscription service

HP recommends that you register your product at the Subscriber's Choice for Business website:

http://www.hp.com/go/e-updates

After registering, you will receive e-mail notification of product enhancements, new driver versions, firmware updates, and other product resources.

After signing up, you can quickly locate your products by selecting **Business support** and then **Storage** under Product Category.

HP websites

For additional information, see the following HP websites:

- http://www.hp.com
- http://www.hp.com/go/storage
- http://www.hp.com/service_locator
- http://www.hp.com/support/manuals
- http://www.hp.com/support/downloads

Documentation feedback

HP welcomes your feedback.

To make comments and suggestions about product documentation, please send a message to storagedocs.feedback@hp.com. All submissions become the property of HP.

1 Before you start

In this chapter:

- "Your HP StorageWorks tape drive" on page 13
- "Refer to www.hp.com/go/connect" on page 14
- "Which operating systems are supported?" on page 14
- "Power specifications" on page 14
- "How do I connect the drive to my server?" on page 14
- "Using the HP StorageWorks Tape CD-ROM" on page 16

Your HP StorageWorks tape drive

This guide describes how to install and operate the following HP StorageWorks Ultrium tape drives:

- HP StorageWorks LTO-5 Ultrium 3000 internal and external tape drives
- HP StorageWorks LTO-4 Ultrium 1760 internal and external tape drives
- HP StorageWorks LTO-3 Ultrium 920 internal and external tape drives
- HP StorageWorks LTO-2 Ultrium 448 internal and external tape drives

For a detailed product specification, please refer to our World Wide Web site (http://www.hp.com/go/tape).

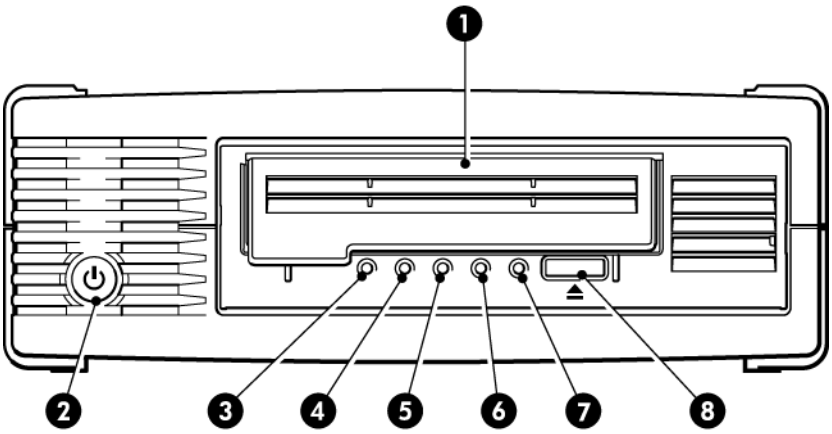

1. Cartridge door
2. On/Off switch (external drives only)
3. Encryption LED (only on Ultrium 3000 tape drives)
4. Clean LED
5. Tape LED
6. Drive LED
7. Ready LED
8. Eject button

Figure 1 Front view of Ultrium external tape drive

Which operating systems are supported?

HP StorageWorks Ultrium drives can be connected to servers running under Windows®, Linux, UNIX and other major operating systems. Refer to the "Software Compatibility" section on our "HP StorageWorks Tape Compatibility" web site (http://www.hp.com/go/connect/) for the most recent information about the operating system versions that are supported.

Power specifications

For a detailed product specification, please refer to our World Wide Web site (http://www.hp.com).

Table 2 Power specifications for Ultrium half-height tape drives

	Ultrium 3000	**All other Ultrium half-height tape drives**
Power consumption	7.5 Watts idle, 24 Watts typical, 40 Watts maximum	13 Watts idle, 20 Watts typical, 33 Watts maximum
Power requirements	+5V @ 4.1A typical +5V @ 4.3A maximum +12V @ 0.75A typical +12V @ 2.3A maximum	+5V @ 2.5A typical +5V @ 2.5A maximum +12V @ 0.7A typical +12V @ 2.1A maximum
Power requirements, external tape drives	100–240 VAC, 50-60 Hz, auto-ranging, 0.8A maximum	100–240 VAC, 50-60 Hz, auto-ranging, 0.7A maximum

How do I connect the drive to my server?

Refer to www.hp.com/go/connect

Installation requires a SAS host controller or host bus adapter (HBA) that supports tape.

The recommended way of connecting a tape drive to your HP or non-HP SAS server, is to purchase and install one of the supported HBAs. Always refer to http://www.hp.com/go/connect **BEFORE** you install your tape drive to ensure that you are connecting to a supported HBA running the recommended firmware version. Be sure to check the details of the specific tape drive and server combination that you require.

Internal drives

The tape drive is installed into a spare drive bay in your server and is attached to the host server's internal SAS controller or SAS host bus adapter.

You need one industry-standard, 5¼-inch, half-height bay in which to install the HP StorageWorks Ultrium tape drive. Different models of server require different mounting methods. Refer to your server documentation for detailed information. See also "Installing an internal Ultrium tape drive" on page 19.

The cable supplied with the tape drive is suitable for connecting to a mini-SAS (SFF-8086/8087) connector on a dedicated HBA or on the server's SAS controller. If your server has a SAS 4i connector (SFF-8484), a suitable cable is available, but must be purchased separately.

NOTE:

Power for the Ultrium 3000 tape drive is supplied through the SAS cable. For all earlier models of tape drive, a separate power cable is required, see https://www.hp.com/go/connect.

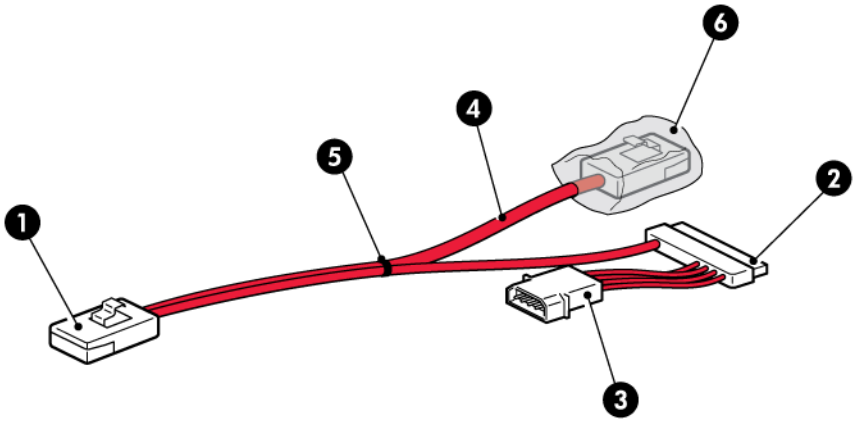

1. Mini-SAS connector to server
2. SAS connector to tape drive
3. Power connector to server's power supply
4. Unused second branch on supplied cable
5. Tie wrap
6. Cover on unused SAS connector

Figure 2 SAS with power cable supplied with Ultrium 3000 internal tape drives

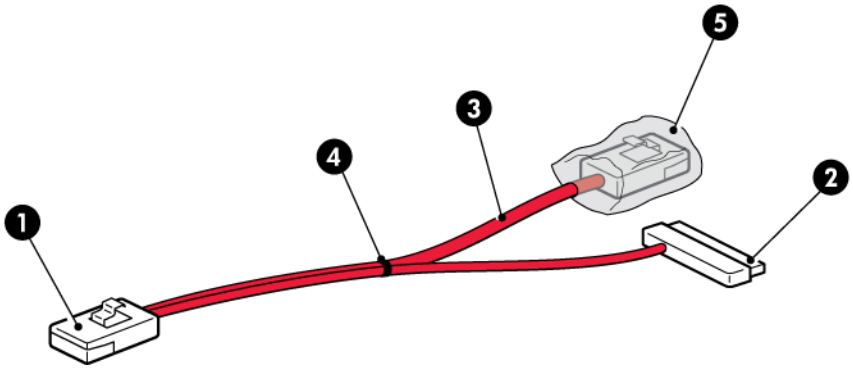

1. Mini-SAS connector to server
2. SAS connector to tape drive
3. Unused second branch on supplied cable
4. Tie wrap
5. Cover on unused SAS connector

Figure 3 SAS without power cable supplied with Ultrium 1760, 920 and 448 internal tape drives

△ CAUTION:

With all tape drives prior to Ultrium 3000, never use a cable where power is supplied through the SAS connector because this may damage the drive. Always use a spare power cord from the server's internal power supply to the conventional power connector on the drive itself.

See "Connect SAS and power cables" on page 24 for detailed instructions on connecting the SAS cable.

External drives

External tape drives must be connected to an external port. The cable supplied with the tape drive is suitable for connecting to an external Mini-SAS (SFF-8088) port on a dedicated HBA (recommended) or the host SAS controller. If your server has an external Infiniband (SFF-8470) connector, a suitable cable is available, but must be purchased separately, see https://www.hp.com/go/connect.

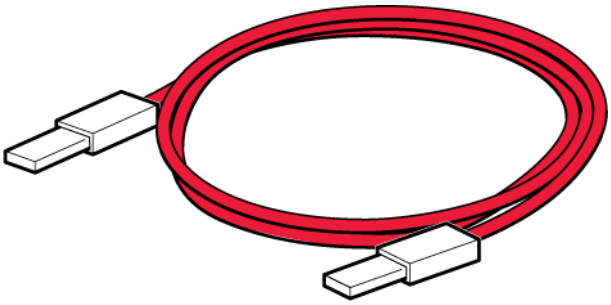

Figure 4 SAS cable supplied with external tape drives

For detailed instructions on connecting the external SAS tape drive, see "Installing an external Ultrium tape drive" on page 37.

Rackmount drives

Specific installation instructions for rackmount drives are not included in this guide. Refer to http://www.hp.com/go/rackmount for the most up-to-date information.

Using the HP StorageWorks Tape CD-ROM

The HP StorageWorks Tape CD-ROM is a central source of information about your tape drive with utilities for getting the best performance from your tape drive.

Use the HP StorageWorks Tape CD-ROM to check installation, as described in this guide, and to verify and troubleshoot performance after installation. It helps you to:

- Install your product, which includes access to drivers, and performance information and tools
- Learn about your product
- Register your product
- Buy media online
- Troubleshoot with HP Library & Tape Tools

2 Drivers and backup software

In this chapter:

- "Install drivers" on page 17
- "Upgrade backup software" on page 18

Install drivers

NOTE:

The HP Tape driver is suitable for use in most applications, but refer also to the documentation of your software application to ensure you are using the recommended driver.

Installing on Windows

The driver available from Microsoft update is acceptable, but the HP Tape driver provides better support for all the features of your new tape drive.

The CD-ROM contains a driver install package for supported Microsoft Windows operating systems (see also http://www.hp.com/go/connect). We recommend that you use the installer package on the HP StorageWorks CD-ROM to install the drivers BEFORE you connect the tape drive.

NOTE:

If you prefer to use Windows Device Manager to install the tape drivers manually, you will find them in the **drivers** directory on the CD-ROM.

Updates to the drivers may be provided from time to time on the HP support web site (http://www.hp.com/support). We recommend that these are installed after using the installer on the CD-ROM.

Installing on Linux and UNIX

The recommended backup applications use the operating system's standard, built-in device drivers. To upgrade drivers we recommend that you patch to the latest version of the operating system or configure device files, as described in the *UNIX, Linux and OpenVMS Configuration Guide* on the CD-ROM.

Installing on IA64

If you are installing on an IA64 system, such as an HP Integrity server, check http://www.hp.com/go/connect for the latest information on the availability of backup application upgrades and drivers.

Upgrade backup software

It is important to check http://www.hp.com/go/connect for software compatibility and install any recommended upgrades.

For optimum performance it is important to use a backup application that is appropriate for your system's configuration. In a direct attach configuration, where the tape drive is attached to a standalone server, you can use backup software that is designed for a single server environment. In network configurations you will need backup software that supports enterprise environments. HP, Symantec, EMC, Yosemite and Computer Associates all provide suitable products. Further details about these and other products that may be appropriate can be found on our connectivity web site.

1. Go to our connectivity web site: http://www.hp.com/go/connect and select **tape backup**.
2. Select **software compatibility**.
3. Select your combination of operating system and tape drive model in the table. A list of supported backup applications is displayed. This will also tell you whether your configuration is compatible with HP One-Button Disaster Recovery, HP OBDR. (All HP StorageWorks Ultrium tape drives support HP OBDR. However, you can only use this feature if your system configuration and backup application also support it. See "Compatibility" on page 53.)
4. Make sure you have a backup application that supports HP StorageWorks Ultrium tape drives and download any upgrades or patches, if required.

Enabling encryption

The HP Ultrium 3000 and Ultrium 1760 tape drives include hardware capable of performing data encryption while writing and data decryption while reading, both at full speed. This is only possible with Ultrium 3 TB and Ultrium 1.6 TB media. See also "Ultrium LTO-4 tape drives and encryption" on page 49.

If you wish to make use of the encryption capability, you must enable this feature via the backup software application. Refer to http://www.hp.com/go/connect to find out which applications support this advanced data protection capability.

3 Installing an internal Ultrium tape drive

In this chapter:

- "Before you start" on page 19
- "Mounting requirements" on page 20
- "Remove server cover - all servers" on page 21
- "Attach mounting hardware - some servers" on page 21
- "Install drive - all servers" on page 23
- "Connect SAS and power cables" on page 24
- "Secure the drive - all servers" on page 35
- "Reboot the server" on page 36

NOTE:

If you are installing an external Ultrium tape drive, please refer to "Installing an external Ultrium tape drive" on page 37.

Before you start

Always refer to http://www.hp.com/go/connect to find out which cabling option is appropriate for your combination of server and tape drive.

Select **tape backup** and navigate down to the Hardware Compatibility table for your make of server. The server/tape drive matrix shows top-level compatibility, but be sure to click on the tick for your combination of server and tape drive to display a further page with detailed connectivity information.

The internal tape drive may be installed in one of three configurations, each of which is described in more detail in "Connect SAS and power cables" on page 24:

- Purchase and install an additional SAS HBA and connect the tape drive to the new HBA. This configuration is suitable for HP and non-HP servers. This is described as Option 1.
- Use the existing SAS controller and connect the tape drive to a spare SAS port on the host SAS controller. This cabling option is suitable for some HP ProLiant servers only. It is described as Option 2.
- Use the existing SAS controller, but replace one of the existing SAS cables to the hard disk drive bays. This requires some recabling inside the server, and may also disconnect one of the hard disk drive bays. This configuration is suitable for some HP ProLiant servers only and, if it does disconnect a hard disk drive bay, you must be sure that the bay is not required for use. Do not move a hard disk to create an empty bay because you may damage your server configuration. Never use this option with RAID configurations. This cabling option is described as Option 3.

Please refer to http://www.hp.com/go/connect for the latest information about SAS host controllers and cabling options with HP ProLiant servers.

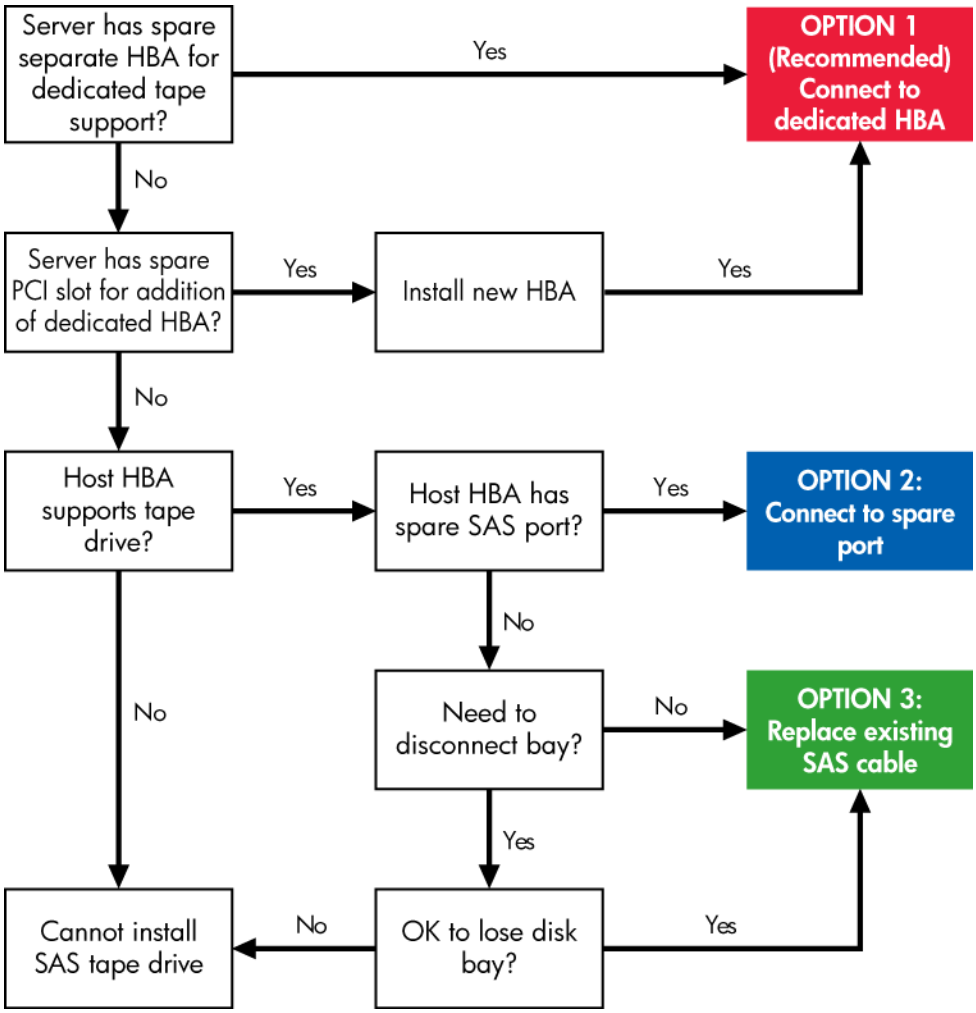

Figure 5 Decision tree for connecting an internal tape drive to an internal SAS port

Mounting requirements

You need one industry-standard, 5¼-inch, half-height bay in which to install the HP StorageWorks Ultrium tape drive.

For many servers, no mounting tray or rails are required. Devices simply slide into the server's chassis and are fixed with screws. Other servers have built-in trays or rails. Rail kits for a number of industry-standard servers may be available. For more details refer to: http://www.hp.com/go/connect.

Some servers use non-standard mounting rails and do not include spares. If this is the case with your system, you will have to order these accessories from the server manufacturer before you can install the tape drive.

Remove server cover - all servers

⚠ WARNING!

To avoid personal injury or damage to the server or tape drive, ensure that the server is disconnected from the mains power supply while you install the drive.

⚠ CAUTION:

Static electricity can damage electronic components. Always wear an antistatic wriststrap if one is available. If not, after you have disconnected power from the server and removed the cover, touch a bare metal part of the chassis. Similarly, touch a bare metal part of the drive before installing it.

1. Assemble the necessary tools and materials:
   - Phillips screwdriver
   - Flat-bladed screwdriver (if your server uses slotted screws)
   - Torx screwdriver (if your server uses torx screws)
   - Your server manuals (for reference during installation)
2. Perform a normal system shutdown and turn off the server and any connected peripherals. Ensure that the server is disconnected from the mains power supply.
3. Remove the cover and front panel from the server, as detailed in your server's documentation.

   As you work inside the server, you may have to disconnect other signal cables or power cords from other devices to maneuver the new drive into place. If you have to do this, make a note of their position and connections so you can put them back correctly later.

   NOTE:

   The server must provide forced cooling and be capable of drawing 6 cfm (0.17 m^3/minute or 10.08 m^3/hour) of air through the tape drive at up to 40^0 C ambient operation. This reduces to 4 cfm at 35^0 C ambient operation. Ensure that empty bays have the appropriate blanking plates installed so that airflow is maintained.

4. Remove the filler panel from a spare 5¼-inch bay of your server, as described in your server's documentation. With some servers you must also remove the half-height device divider.

Attach mounting hardware - some servers

If your server requires special rails or other hardware to install the tape drive, mount them on the tape drive now.

If your server does not require special mounting hardware, proceed to *"Install drive - all servers" on page 23 now.*

HP ProLiant servers

NOTE:

If mounting hardware is supplied with your tape drive, it may not be exactly the same as shown in the illustrations.

Different models of server require different mounting methods. The server may also incorporate a locking mechanism to hold the tape drive in place. See "Secure the drive - all servers" on page 35.

Please check your HP ProLiant server documentation to ascertain the correct method of mounting, and to check whether mounting hardware is provided with the server.

Mounting rails

Some HP ProLiant servers require mounting rails. These may be metal or plastic rails attached to the server's drive bay filler panel.

Use a regular Phillips screwdriver to attach the appropriate rails. Use the 6 mm M3 screws provided with the tape drive, in the screw pack labeled 'General Mounting Screws', as shown below.

If you cannot tighten the screws, use the washers provided in the pack.

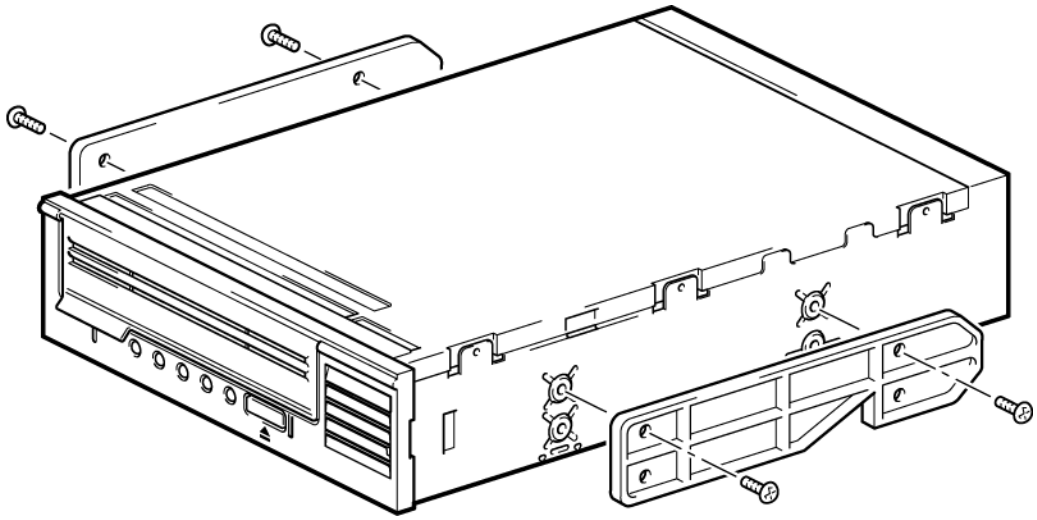

Figure 6 Attaching mounting rails

CAUTION:

Ensure you do use the 6 mm M3 screws provided. The rails may be attached to the filler panel by screws of a different thread/size type and these should **not** be used. If the screws are too long, they may penetrate the mechanism and void the warranty.

Mounting screws

Other HP ProLiant server models, such as ML350 and ML370, only require the use of special locating screws with no mounting rail.

Use a T8 Torx screwdriver to attach the appropriate screws. Locate both screws lightly in position before tightening, as shown in Figure 7 on page 23.

- HP ProLiant ML350: Use the metal shims and screw pack labeled 'ProLiant ML350'. These have a thicker head than the general mounting screws.
- HP ProLiant ML370: Use the metal shims and screw pack labeled 'ProLiant ML370'. These have a thick offset piece and a thicker head than the general mounting screws.

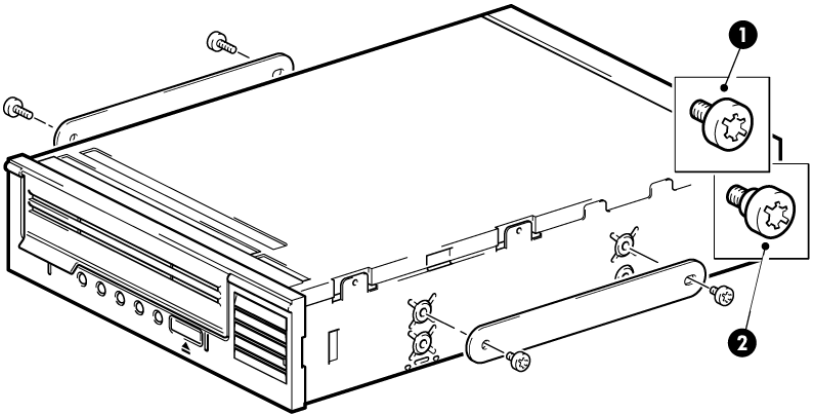

1. 6 mm M3 mounting screws
2. 6 mm M3 offset mounting screws

Figure 7 Attaching locating screws in a typical HP ProLiant ML350 or ML370

Other servers

Attach the appropriate mounting hardware. Refer to the manufacturer's documentation for instructions.

- If you are installing on a server that requires a tray, place the tape drive in the tray.
- Some servers have snap-on mounting rails attached to the filler panel. These can be removed and attached to the tape drive with screws.

Install drive - all servers

NOTE:

If cable access for the tape drive bay is awkward, it may be easier to access power and other connections if the tape drive is installed in the top bay. You may need to move other devices to lower bays to achieve this. Refer also to your server documentation.

Slide the tape drive into the open bay, aligning the tray or rails with the slots in the bay, as shown in Figure 8 on page 24.

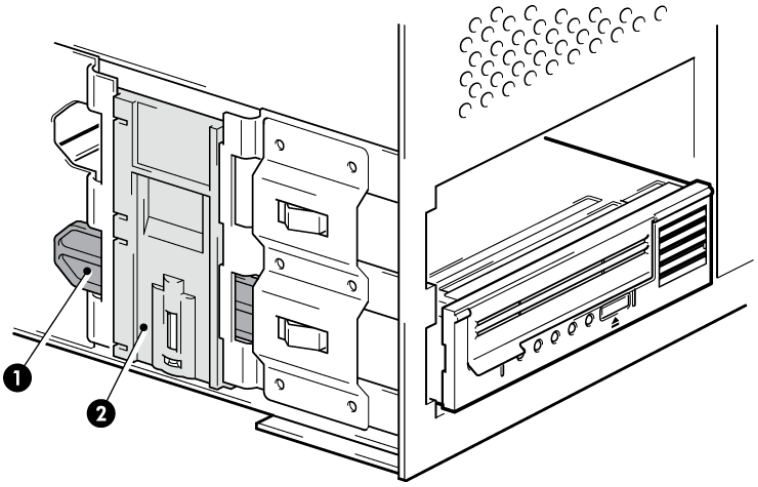

Figure 8 Installing tape drive

NOTE:

The illustration shows a server that uses mounting rails. If your server does not use mounting hardware, check that the holes in the chassis are aligned with the holes in the side of the tape drive.

Do not secure the drive at this point because you may have to move the drive to get the cables into place.

Connect SAS and power cords

There are three options for connecting the tape drive. Each is described separately in this section.

- Connect to a dedicated HBA (recommended)
- Connect to a spare port on the host controller (recommended)
- If both ports on the host controller are in use, replace one of the existing cables with the supplied SAS cable (**not** recommended, use this option with care)

Supplied SAS cable

Power is supplied from the SAS connector on the SAS cable supplied with HP StorageWorks LTO-5 Ultrium 3000 tape drives.

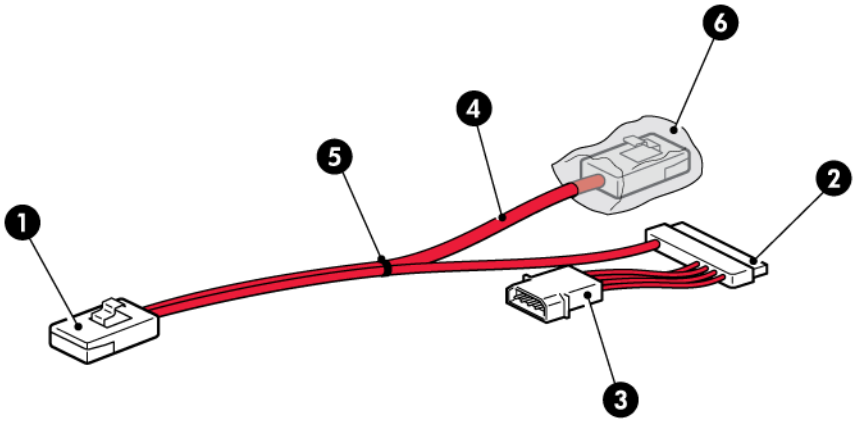

1. Mini-SAS connector to server
2. SAS connector to tape drive
3. Power connector to server's power supply
4. Unused second branch on supplied cable
5. Tie wrap
6. Cover on unused SAS connector

Figure 9 SAS cable supplied with LTO-5 Ultrium 3000 tape drives

The SAS connector on the cable supplied with all other HP StorageWorks Ultrium tape drives does not provide power. There is a separate power connector on the rear of the tape drive.

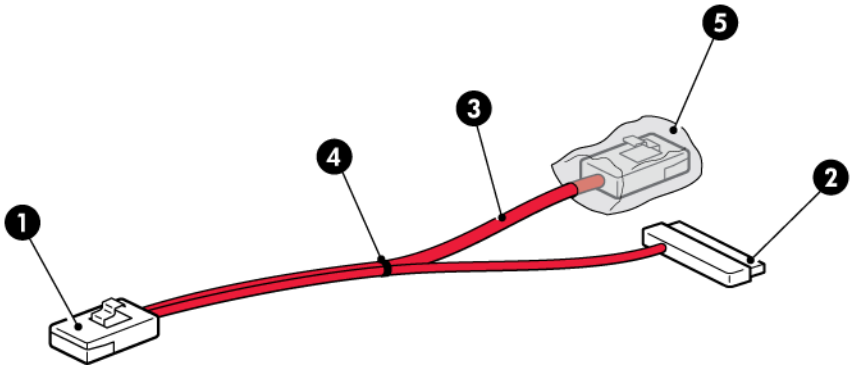

1. Mini-SAS connector to server
2. SAS connector to tape drive
3. Unused second branch on supplied cable
4. Tie wrap
5. Cover on unused SAS connector

Figure 10 SAS cable supplied with all other Ultrium tape drives

NOTE:

The cable supplied with the tape drive is suitable for connecting to a mini-SAS (SFF-8086/8087) connector on a dedicated HBA or on the server's SAS controller. If your server has a SAS 4i connector (SFF-8484), a suitable cable is available, but must be purchased separately, see https://www.hp.com/go/connect.

Option 1: Connect to a new HBA (all servers)

The following instructions are valid ONLY IF you have purchased and installed an additional HBA. See Figure 5 on page 20 and always refer to http://www.hp.com/go/connect **BEFORE** installing your tape drive.

IMPORTANT:

A SAS cable for connection to a dedicated HBA is supplied with the tape drive. This is a split cable, but the second branch is not required. Do NOT remove the tie wrap and cover on the spare connector.

1. If necessary, install a new HBA. Follow the instructions supplied with the HBA to install it and its driver.
2. Connect the SAS cable supplied with the tape drive to the new HBA.

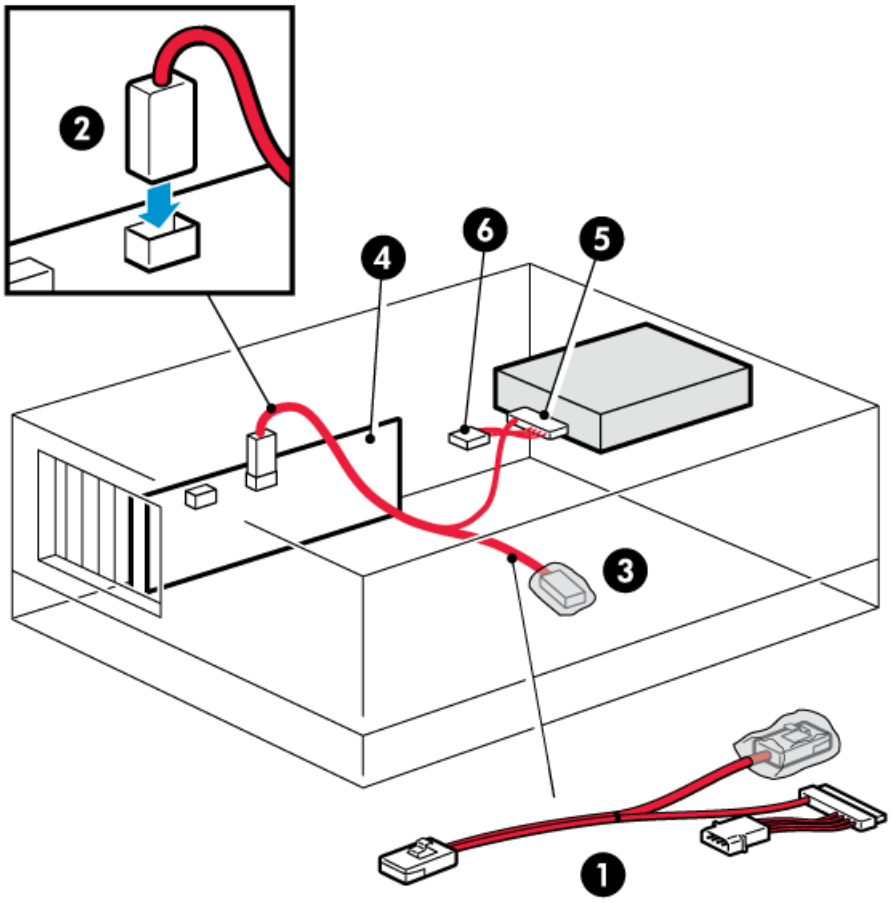

1. SAS cable supplied with tape drive
2. Connect SAS cable to new HBA
3. Unused connector on SAS cable
4. New SAS HBA
5. Connector for tape drive
6. Power connector to server (Ultrium 3000 only)

Figure 11 Cabling to a new HBA

3. Connect the other end of the SAS cable to the tape drive.

   Ultrium 3000 tape drives: Connect a spare power cable from the server's internal power supply to the power connector on the SAS data cable.

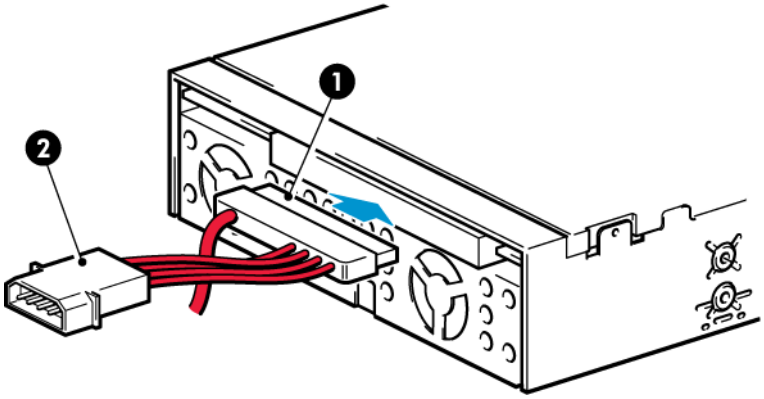

1. Power connector
2. SAS connector to tape drive

Figure 12 Connecting cables to the Ultrium 3000 tape drive

   All other Ultrium tape drives: Connect a spare power cord from the server's internal power supply to the power connector on the tape drive.

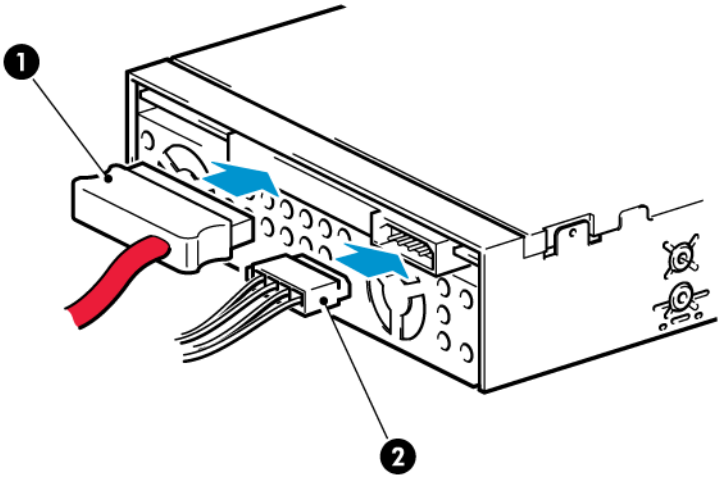

1. SAS connector
2. Power connector

Figure 13 Connecting cables to all other LTO tape drives

△ CAUTION:

Never use a cable where power is supplied through the SAS connector because this may damage the drive. Always use a spare power cord from the server's internal power supply. (This caution does not apply to Ultrium 3000 tape drives.)

4. This will leave unused SAS cabling within the server because the other SAS connector is not required in this configuration. Coil and secure the unused cabling so that it does not interfere with other components inside the server.
5. Now go to "Secure the drive - all servers" on page 35.

Option 2: Connect cable to spare port on host SAS controller

The following instructions apply to some HP servers. They are valid ONLY IF the host SAS controller on your server is supported and has a spare SAS connector. See Figure 5 on page 20 and always refer to http://www.hp.com/go/connect **BEFORE** installing your tape drive.

IMPORTANT:

This installation uses the SAS cable supplied with the tape drive to connect to an internal port on the host SAS controller. It does not modify your existing SAS configuration. The second branch of the split cable is not required for this installation. Do NOT remove the tie wrap and cover on the spare connector.

1. Connect the SAS cable supplied with the tape drive to the spare SAS port on the host SAS controller.

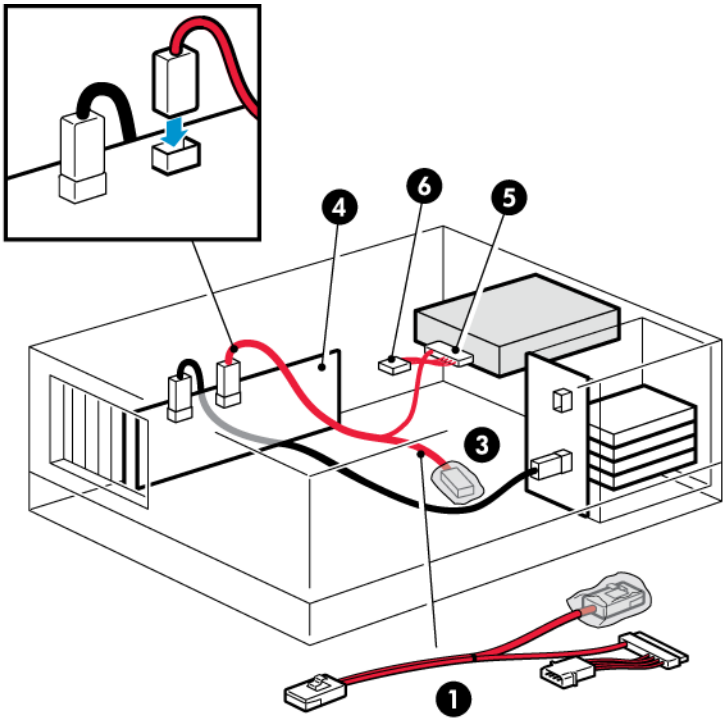

1. SAS cable supplied with tape drive
2. Connect SAS cable to spare SAS port
3. Unused connector on SAS cable
4. Host SAS controller
5. SAS connector to tape drive
6. Power connector to server (Ultrium 3000 only)

Figure 14 Cabling to the spare SAS port (some HP ProLiant servers)

2. Connect the other end of the SAS cable to the tape drive.

   Ultrium 3000 tape drives: Connect a spare power cable from the server's internal power supply to the power connector on the SAS data cable.

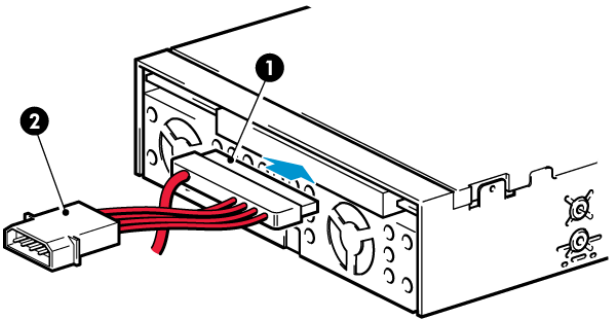

1. SAS connector to tape drive
2. Power connector

Figure 15 Connecting cables to the Ultrium 3000 tape drive

   All other Ultrium tape drives: Connect a spare power cord from the server's internal power supply to the power connector on the tape drive.

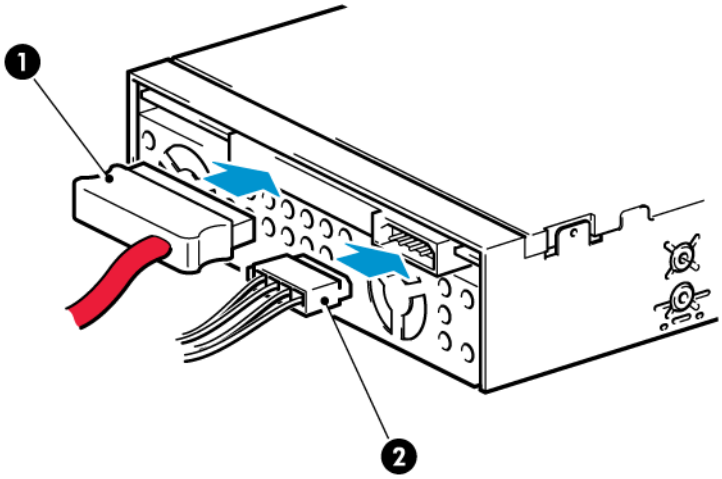

1. SAS connector
2. Power connector

Figure 16 Connecting cables to all other LTO tape drives

△ CAUTION:

Never use a cable where power is supplied through the SAS connector because this may damage the drive. Always use a spare power cord from the server's internal power supply. (This caution does not apply to Ultrium 3000 tape drives.)

3. This will leave unused SAS cabling within the server because the other SAS connector is not required in this configuration. Coil and secure the unused cabling so that it does not interfere with other components inside the server.
4. Now go to "Secure the drive - all servers" on page 35.

Option 3: Connect cable to port on host SAS controller and replace existing SAS cable

The following instructions are valid for some HP ProLiant servers.

This installation uses the HP SAS split cable to replace one of the existing SAS cables from the host SAS controller to the server's SAS hard disk drive bays. The SAS data cable has four data paths; this configuration diverts the wiring from one of the hard disk drive bays to the tape drive. You should be aware that you may lose the use of a hard disk drive bay with this cabling solution.

△ CAUTION:

Do **NOT** use this option with RAID configurations.

1. Remove the tie wrap and dust cover on the supplied mini-SAS cable. You will need to use the SAS connector on the second branch of the cable for this installation.
2. HP strongly recommends that the tape drive is connected to the second SAS port on the host controller (this is the port that connects to the hard disk drive bays with the highest numbers). Look at the front of the server and establish which SAS cable is connected to the hard disk drive bays with the highest numbers.

   Cable routing varies from one server to another. You may need to remove other components, such as fan banks, while you work with the cable. Always refer to your server documentation for server-specific cabling instructions.

   △ CAUTION:

   It is not possible to identify which disk drive bay will be lost for all servers (it is normally the highest-numbered disk bay). The only way to be sure, is to check the disk LEDs after installating the tape drive. For this reason, you should never attempt this installation if you have a disk RAID configuration.

3. Remove the existing SAS cable.

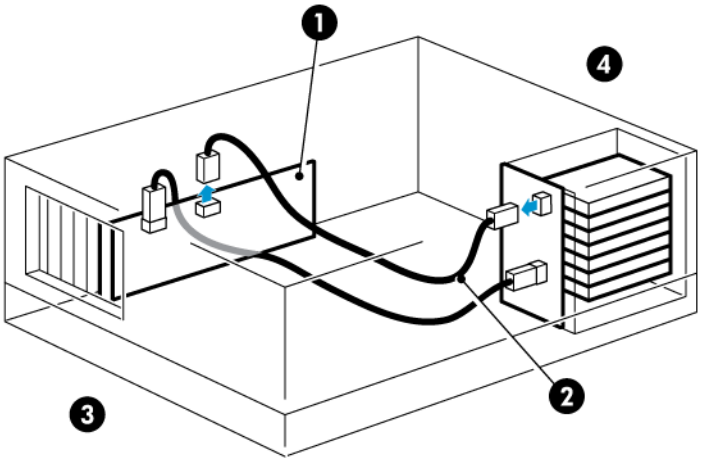

1. Host SAS controller (HBA)
2. Cable to be removed
3. Rear of server
4. Front of server

Figure 17 Removing the existing SAS cable

4. Connect the replacement cable supplied with the tape drive to the host SAS controller, as illustrated in the following diagram.

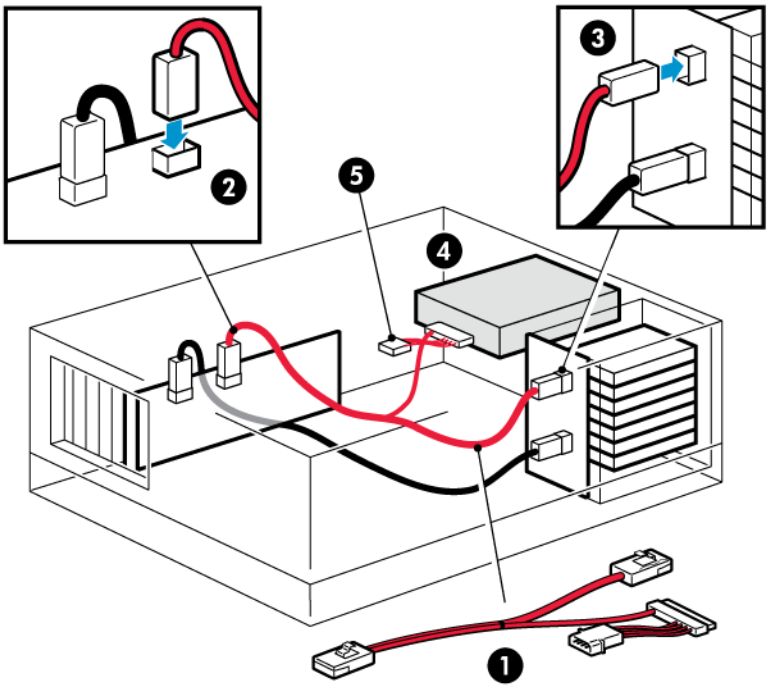

1. Replacement SAS cable
2. Connect replacement SAS cable to host SAS HBA
3. Connect replacement SAS cable to disk bay
4. SAS connector to tape drive
5. Power connector to server (Ultrium 3000 only)

Figure 18 Cable routing with replacement SAS cable

5. Attach the SAS cable to the SAS connector on the tape drive.

   Ultrium 3000 tape drives: Connect a spare power cable from the server's internal power supply to the power connector on the SAS data cable.

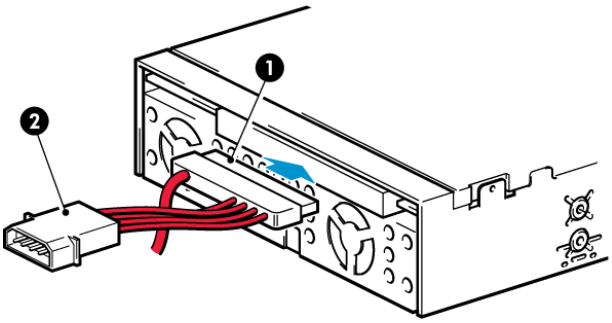

1. SAS connector to tape drive
2. Power connector

Figure 19 Connecting cables to the Ultrium 3000 tape drive

   All other Ultrium tape drives: Connect a spare power cord from the server's internal power supply to the power connector on the tape drive.

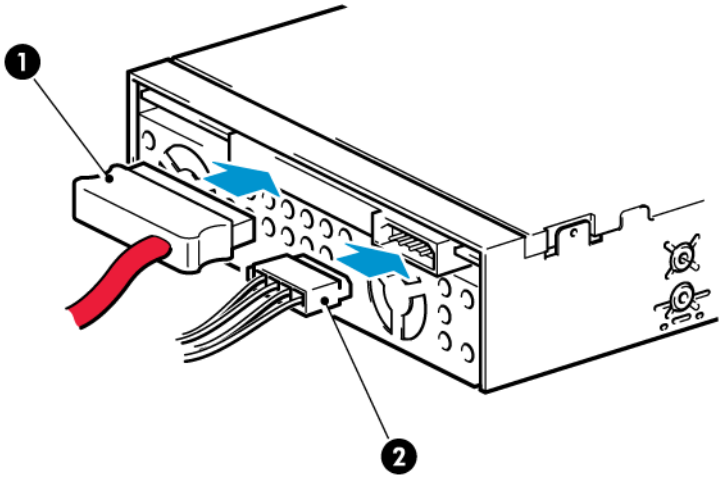

1. SAS connector
2. Power connector

Figure 20 Connecting cables to all other LTO tape drives

△ CAUTION:

Never use a cable where power is supplied through the SAS connector because this may damage the drive. Always use a spare power cord from the server's internal power supply. (This caution does not apply to Ultrium 3000 tape drives.)

6. If you have lost the use of a disk bay, we strongly recommend that you attach the supplied sticker to the blanking plate of the disk bay to show that it is disconnected.

NOTE:

If you subsequently install a hard disk in this bay, it will not work. This does not mean there is a fault with either the disk or the server.

7. Now go to "Secure the drive - all servers" on page 35.

Secure the drive - all servers

NOTE:

The server latches and side views of your server model may not be exactly the same as shown in the illustrations. Please also refer to your server documentation.

Mounting hardware used

Ensure that you use the correct mounting rails or locating screws, as described in "Attach mounting hardware - some servers" on page 21. The server also has a locking mechanism to hold the tape drive in place.

1. Push the server latch down to lock the tape drive into position, as shown in Figure 21 on page 35.

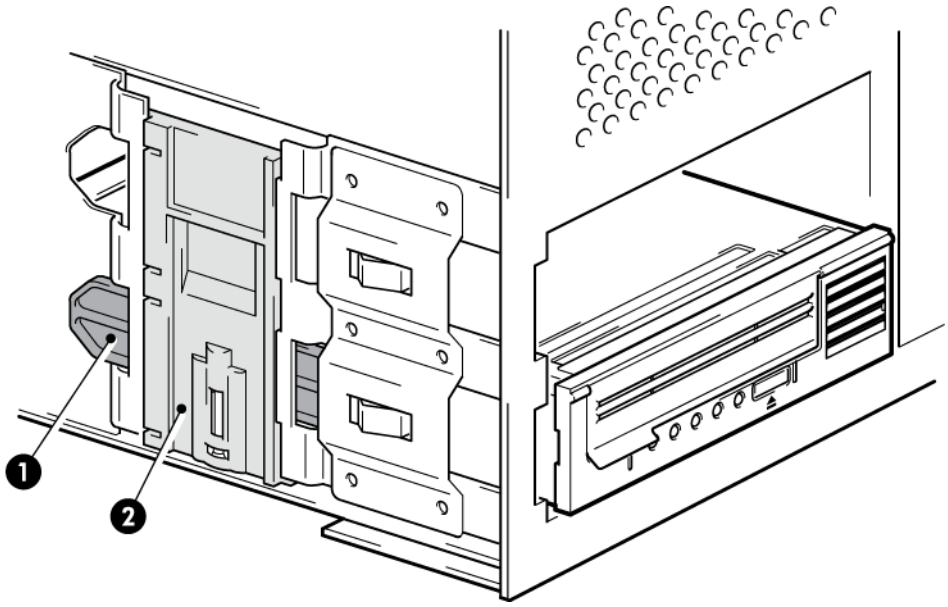

1. Plastic rail
2. Server latch

Figure 21 Securing drive, mounting hardware used

2. Ensure blanking plates are in place over empty bays and replace the cover on the server.

No mounting hardware used

1. Use the M3 screws provided with the tape drive in the screw pack labeled 'General Mounting Screws'. Check that the holes in the chassis are aligned with the holes in the sides of the drive and use a regular Phillips screwdriver to secure the M3 screws, as shown in Figure 22 on page 36.

   If you cannot tighten the screws, use the washers provided in the pack.

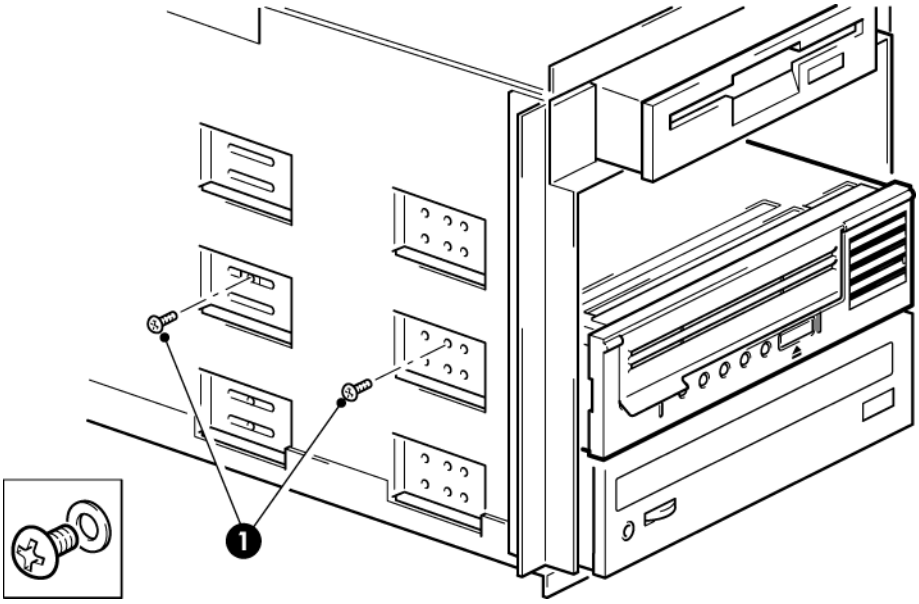

1. M3 screws, supplied with tape drive

Figure 22 Securing drive, no mounting hardware used

2. Ensure blanking plates are in place over empty bays and replace the cover on the server.

Reboot the server

Reboot the server to power up the tape drive and server.

Watch the boot screen carefully after installation. If there are any error or unexpected messages go back and check the SAS cabling carefully.

- Have you installed the SAS cable correctly?
- Have you reconnected all devices securely?

If this does not resolve the problem, refer to "Troubleshooting" on page 61 for further guidelines.

4 Installing an external Ultrium tape drive

This chapter describes how to connect your tape drive to an external port on the host controller or new HBA. A suitable cable is supplied with your tape drive for connecting to an external mini-SAS port.

In this chapter:

- "Before you start" on page 37
- "Connecting the tape drive to an external SAS port" on page 38

If you are installing an internal Ultrium tape drive, please refer to "Installing an internal Ultrium tape drive" on page 19.

Before you start

This installation connects the tape drive directly to the external port. The cable supplied with the tape drive is suitable for connecting to an external mini-SAS (SFF-8086/8087) connector on a dedicated HBA or on the server's SAS controller. If your server has an external SAS 4i connector (SFF-8484), a suitable cable is available, but must be purchased separately, see https://www.hp.com/go/connect.

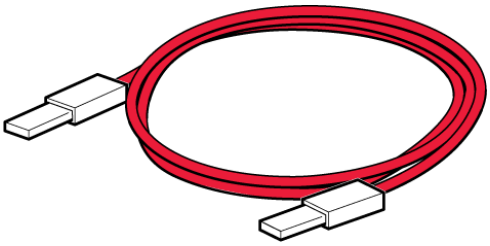

Figure 23 Supplied SAS external cable (connect to external port)

If the server does not have an active external port, you must purchase and install an additional HBA that supports external connection. If you are installing a new HBA, a spare PCI slot is required for the new HBA. See http://www.hp.com/go/connect for recommended products.

NOTE:

If you use a recommended cable to attach directly to the external SAS port and the tape drive does not function, one possible cause is that the port is inactive or not supported for external tape devices. Please refer to http://www.hp.com/go/connect or your server documentation for further information on supported configurations.

⚠ WARNING!

The supplied power cord is HP approved for your specific geographic region. Use of a non-HP approved power cord may result in: 1) not meeting individual country specific safety requirements; 2) insufficient conductor ampacity that could result in overheating with potential personal injury and/or property damage; and 3) an unapproved power cord could fracture resulting in the internal contacts being exposed, which potentially could subject the user to a shock hazard. HP disclaims all liability in the event a non-HP approved power cord is used.

Connecting the tape drive to an external SAS port

1. If installing a new HBA, follow the instructions supplied with the HBA to install it and its driver.
2. Connect the supplied SAS cable to the external SAS connector on the host SAS controller or new HBA.

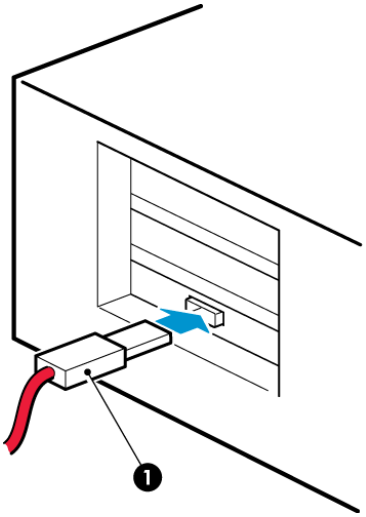

1. SAS connector on server

Figure 24 Connecting the SAS cable to the server

3. Connect the SAS and power cords to the tape drive and plug the other end of the power cord into the power outlet.

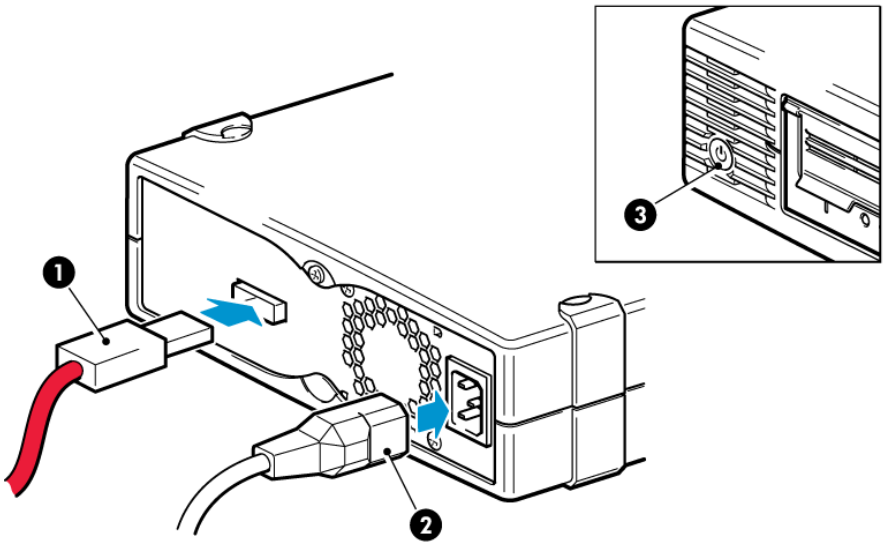

1. SAS connector
2. Power connector
3. Power on/off switch

Figure 25 Connecting the cables to the tape drive

Reboot the server

Switch on the tape drive and power up the server. The power on/off switch is on the front panel.

Watch the boot screen carefully after installation. If there are any error or unexpected messages go back and check the SAS cabling carefully.

If this does not resolve the problem, refer to "Troubleshooting" on page 61 for further guidelines.

5 Verify installation

Once you have installed the drive hardware, check that drivers have been installed correctly and you have the correct version of backup software, and verify that the tape drive is functioning properly before you store your valuable data.

1. Switch on the drive and the server.
2. The tape drive will run its hardware self-test, which takes about 5 seconds. If self-test passes, the green Ready LED flashes and then shows steady green. If the test fails, the Drive Error and Tape Error LEDs flash, while the Ready and Clean LEDs are off. This continues until the drive is reset. See "Understanding LED sequences" on page 63 for more information about front panel lights.
   - **If you installed drivers before connecting the tape drive (Windows only)**

     The tape drive should be detected automatically and the correct drivers used. (See "Install drivers" on page 17.) If the Windows Found New Hardware wizard runs, cancel it - you can use Device Manager to check that the driver is installed.
   - **Installing drivers after connecting the tape drive (Windows only)**

     If you have not already installed drivers, the Windows Found New Hardware wizard will run when you power on the server and tape drive. Either follow the on-screen instructions to search for the required driver on the HP StorageWorks CD-ROM or cancel the wizard and run the install package from the CD-ROM.
   - **Installing drivers (other operating systems)**

     Drivers are included with the operating system and should be loaded automatically.

NOTE:

Certain backup applications require you to use their own Tape driver instead of the HP Tape driver.

3. Verify that the tape drive installation was successful.

   HP StorageWorks Library & Tape Tools (L&TT) is the recommended diagnostic and support tool for your HP tape drive. Use it to verify installation and confirm that your tape drive is functioning correctly before you use it for backup. It is available free at http://www.hp.com/support/tapetools.
4. For all operating systems ensure that you have downloaded any upgrades necessary for your backup application. Check http://www.hp.com/go/connect for software compatibility and install any recommended upgrades.
5. Carry out a backup and restore test to check that the drive can write data to tape. Use a blank cartridge.

   Windows Backup or UNIX native backup applications can be used to check basic tape drive operation, but they will not support all the advanced features of your tape drive. We recommend that you upgrade your software application before running this test.

6 Operating your tape drive

In this chapter:

- "Your HP StorageWorks tape drive" on page 43
- "Loading a cartridge" on page 45
- "Unloading a cartridge" on page 45
- "Removing power from the drive" on page 46

Your HP StorageWorks tape drive

See also "Understanding LED sequences" on page 63.

HP StorageWorks LTO-5 Ultrium tape drives

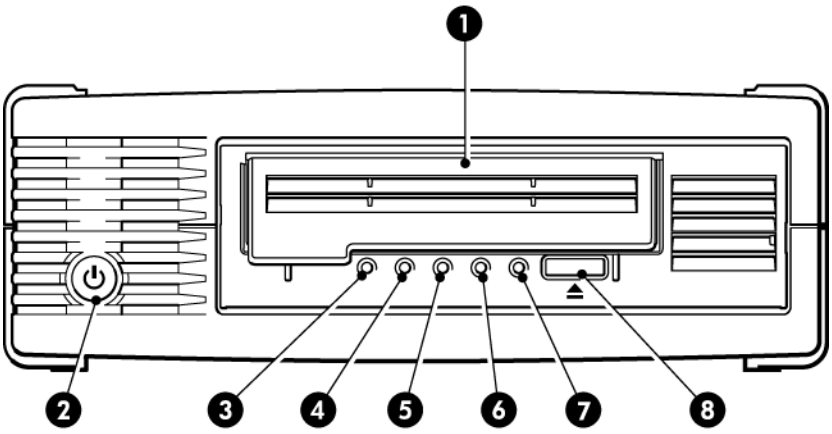

1. Cartridge door
2. On/Off switch (external drives only)
3. Encryption LED
4. Clean LED
5. Tape LED
6. Drive LED
7. Ready LED
8. Eject button

Figure 26 Front view of Ultrium 3000 external tape drive

All other Ultrium tape drives

Earlier versions of the Ultrium tape drive do not have an Encryption LED.

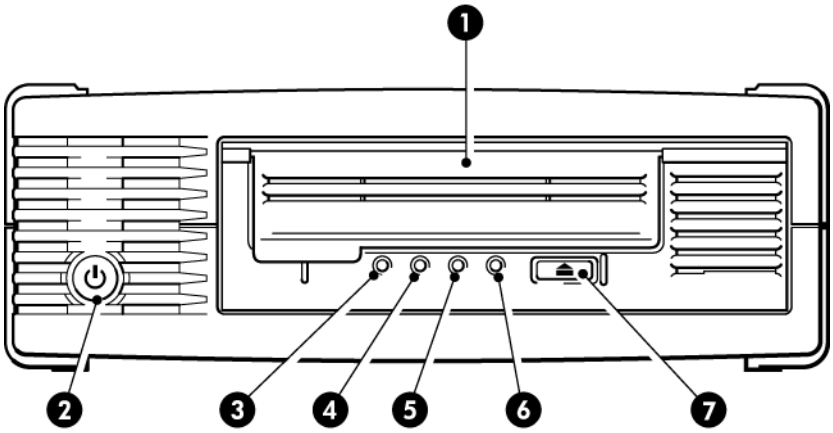

1. Cartridge door
2. On/Off switch (external drives only)
3. Clean LED
4. Tape LED
5. Drive LED
6. Ready LED
7. Eject button

Figure 27 Front view of earlier Ultrium external tape drives

Loading a cartridge

1. Lift the cartridge door and insert the cartridge into the slot in the front of the drive with the white arrow uppermost and facing the drive door.

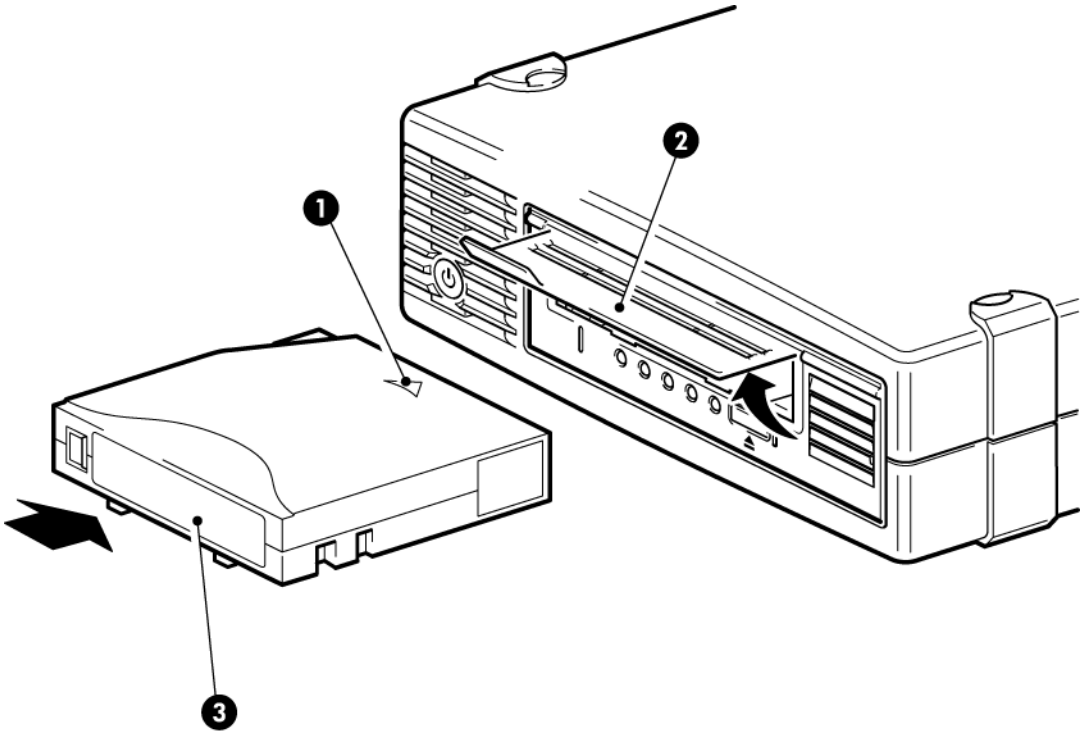

1. Arrow indicates leading direction
2. Label area
3. Cartridge door
4. Ready light

Figure 28 Inserting a cartridge

2. Apply gentle pressure until the drive takes the cartridge and loads it. (See "Inserting a cartridge" on page 45.)
3. The Ready light flashes green while the drive performs its load sequence. When the cartridge is loaded, the Ready light shows steady green.

Unloading a cartridge

△ CAUTION:

Never try to remove a cartridge before it is fully ejected.

1. Press the Eject button on the front panel.

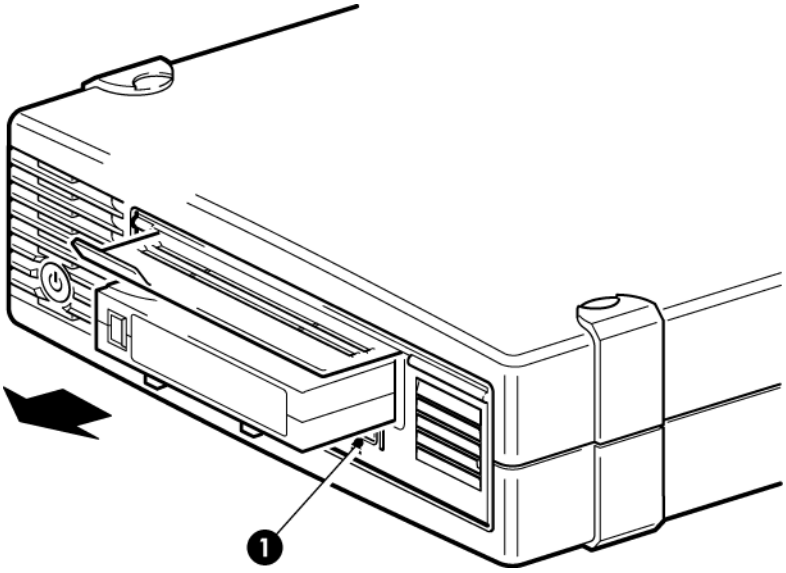

1. Eject button

Figure 29 Ejecting a cartridge

2. The drive will complete its current task, rewind the tape to the beginning, and eject the cartridge. The rewind process may take up to 10 minutes. The Ready light will flash to indicate that the unload is still in progress.

Removing power from the drive

To ensure reliable operation, do not remove power from the drive during read, write, fast-search, load and unload activities.

7 Use the correct media

For best performance we recommend HP branded media. Order online at:http://www.hp.com/go/storagemedia.

In this chapter:

- "Cartridges" on page 47
- "HP Ultrium WORM data cartridges" on page 48
- "Ultrium LTO-5 tape drives and partitioning" on page 49
- "Ultrium LTO-4 tape drives and encryption" on page 49
- "Write protecting cartridges" on page 51
- "Cleaning the tape drive" on page 52
- "Handling cartridges" on page 52
- "Operating and storage environment" on page 52

Cartridges

Cleaning cartridges

The recommended cleaning cartridges is the HP Ultrium universal cleaning cartridge, C7978A (Orange). This cleaning cartridge is designed to work with any Ultrium drive. It may be used for up to 50 cleans.

NOTE:

The earlier HP Ultrium Cleaning cartridge, C7979A (Blue), is supported on Ultrium 448 and Ultrium 920 tape drives (but **not** on Ultrium 1760 and Ultrium 3000 tape drives). Do not use early, non-universal Ultrium cleaning cartridges from other manufacturers.

Data cartridges

Ultrium tape drives use Ultrium tape cartridges. These are single-reel cartridges that match your drive's format and are optimized for high capacity, throughput and reliability. Compatible media can be recognized by the Ultrium logo, which is the same as the logo on the front of your drive. Do not use other format cartridges in your tape drive and do not use Ultrium cartridges in other format tape drives.

For optimum performance always use a data cartridge that matches the specification of your tape drive, (see table below). A lower specification will have a lower transfer speed and may not support write activities; a higher specification will not support read or write.

We recommend:

- Ultrium 3 TB RW* and Ultrium 3 TB* WORM tape cartridges for use with Ultrium 3000 tape drives.
- Ultrium 1.6 TB RW* and Ultrium 1.6 TB* WORM tape cartridges for use with Ultrium 1760 tape drives.
- Ultrium 800 GB RW* and Ultrium 800 GB* WORM tape cartridges for use with Ultrium 920 tape drives.
- Ultrium 400 GB* RW tape cartridges for use with Ultrium 448 tape drives.

Table 3 Data cartridge compatibility

Tape drive model	Ultrium 200 GB* data cartridge	Ultrium 400 GB* data cartridge	Ultrium 800 GB* data cartridge	Ultrium 1.6 TB* data cartridge	Ultrium 3 TB* data cartridge
Ultrium 3000	not supported	not supported	read only	read/write and write once/read many	**read/write (C7975A) and write once/read many (C7975W)**
Ultrium 1760	not supported	read only	read/write and write once/read many	**read/write (C7974A) and write once/read many (C7974W)**	not supported
Ultrium 920	read only	read/write	**read/write (C7973A) and write once/read many (C7973W)**	not supported	not supported
Ultrium 448	read/write	**read/write (C7972A)**	not supported	not supported	not supported
* Capacity assumes 2:1 compression.					

NOTE:

The 100 GB* data cartridge, C7970A, is also supported on Ultrium 448 tape drives. It is **not** supported on Ultrium 920, Ultrium 1760 and Ultrium 3280 tape drives.

HP Ultrium WORM data cartridges

The HP StorageWorks Ultrium 3000, 1760 and 920 tape drive includes support for both re-writable and Write-Once, Read-Many, WORM, data cartridges. WORM cartridges provide an enhanced level of data security against accidental or malicious alteration of data on the tape cartridge. The WORM data cartridge can be appended to maximize the full capacity of the tape cartridge, but the user will be unable to erase or overwrite data on the cartridge. Any attempt to modify a WORM cartridge to enable writing over existing data will result in the media becoming permanently write protected. It should still be readable in a WORM drive, depending upon the severity of the tampering, but no further appended backups will be possible.

WORM data cartridges are clearly identified by their distinctive, two-tone cartridge color. They can only be used with Ultrium tape drives that support the WORM feature.

To check whether your backup or archive software application supports WORM cartridges, refer to the following web site: http://www.hp.com/go/connect.

For information on how your HP Ultrium StorageWorks tape drive and WORM cartridge can help your business meet Information Lifecycle Management and regulatory compliance requirements, please refer to the HP Business Support Center at: http://www.hp.com/go/bizsupport.

Ultrium LTO-5 tape drives and partitioning

The Ultrium 3000 tape drive supports two tape partitions, when used with Ultrium 3 TB R/W cartridges. Tape partitioning is not supported with WORM cartridges or with earlier generations of cartridge. It is not supported on earlier-generation tape drives. If you insert a partitioned tape into a tape drive that does not support partitioning, it will be ejected.

To check for the latest information about support for partitioning and any required firmware upgrades, go to http://www.hp.com/support/downloads. Refer to your backup application's documentation for information about creating and using partitions on the tape drive.

Ultrium LTO-5 and LTO-4 tape drives and encryption

The Ultrium 3000 and 1760 tape drive includes hardware capable of performing data encryption at full speed while writing data, and decrypting when reading.

Encryption is the process of changing data into a form that cannot be read until it is deciphered, protecting the data from unauthorized access and use. HP Ultrium 3000 and 1760 tape drives use the strongest version of the industry-standard AES encrypting algorithm to protect your data.

To make use of this feature you need:

- A backup application that supports hardware encryption
- Ultrium 3 TB media (C7975A or C7975W) or Ultrium 1.6 TB media (C7974A or C7974W); no encryption will be performed when writing earlier generations of tape

When should I use encryption?

Your company policy will determine when you need to use encryption. For example, it may be mandatory for company confidential and financial data, but not for personal data. Company policy will also define how encryption keys should be generated and managed. Backup applications that support encryption will generate a key for you or allow you to enter a key manually.

NOTE:

Encryption with keys that are generated directly from passwords or passphrases may be less secure than encryption using truly random keys. Your application should explain the options and methods that are available. Please refer to your application's user documentation for more information.

How do I enable encryption?

Hardware encryption is turned off by default and is switched on by settings in your backup application, where you also generate and supply the encryption key. Your backup application must support hardware encryption for this feature to work. The software supplied with the tape drive provides this support. See http://www.hp.com/go/connect for an up-to-date list of other suitable backup software.

When will I be asked to enter the key?

Encryption is primarily designed to protect the media once it is offline and to prevent it being accessed from another machine. You will be able to read and append the encrypted media without being prompted for a key as long as it is being accessed by the machine and application that first encrypted it.

There are two main instances when you will need to know the key:

- If you try to import the media to another machine or another instance of the backup application
- If you are recovering your system after a disaster

What happens if I don't remember the key?

If you are unable to supply the key when requested to do so, neither you nor HP Support will be able to access the encrypted data.

This guarantees the security of your data, but also means that you must be careful in the management of the encryption key used to generate the tape.

⚠ WARNING!

You should keep a record or backup of your encryption keys and store them in a secure place separate from the computer running the backup software.

Does encryption affect tape drive performance?

Hardware encryption can be used with or without compression and without speed or capacity penalties.

Does the tape drive encrypt media in an earlier Ultrium format?

Encryption is supported only on Ultrium 3 TB media (C7975A or C7975W) and Ultrium 1.6 TB media (C7974A or C7974W).

Encrypted Ultrium 3 TB and 1.6 TB tapes can be read on any compatible Ultrium tape drive that supports hardware encryption. (HP Ultrium LTO-5 tape drives can read and write encrypted Ultrium 3 TB media and Ultrium 1.6 TB media; HP Ultrium LTO-4 tape drives can read and write encrypted Ultrium 1.6 TB media.)

Hardware encryption is not supported on any earlier Ultrium media, such as Ultrium 800 GB and Ultrium 400 GB.

Where can I get more information?

For more information about AES encryption, encryption keys, and using hardware encryption with your HP Ultrium tape drive, see http://h18006.www1.hp.com/products/storageworks/lto4Encryp/index.html or refer to the White Papers on http://h18006.www1.hp.com/storage/tapewhitepapers.html.

For detailed instructions about enabling encryption please refer to the documentation supplied with your backup application. This will also highlight any default states, for example when copying tapes, that may need changing if using encrypted tapes.

Write protecting cartridges

⚠ WARNING!

Always remove the cartridge from the tape drive before you change the write protection.

If you want to protect the data on a cartridge from being altered or overwritten, you can write protect the cartridge.

- To write protect a cartridge, push the switch to the right to prevent any data recording on the cartridge. Note the padlock on the tab that indicates that the cartridge is protected.
- To write enable a cartridge, push the switch to the left to allow data recording on the cartridge. Figure 30 on page 51 illustrates the location of the write-protect tab.

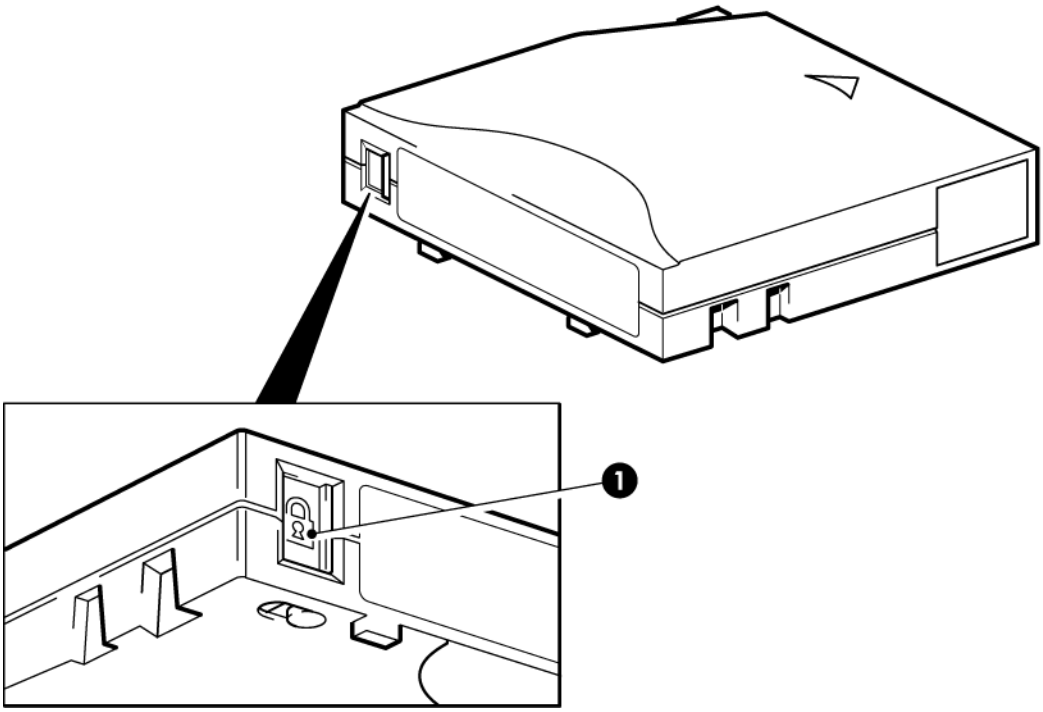

1. Write-protect tab

Figure 30 Write protecting a cartridge

⚠ CAUTION:

Write-protection will not protect your cartridges against magnets. Write-protection will not prevent a cartridge being erased by bulk-erasure or degaussing. Do **not** bulk erase Ultrium format cartridges. This will destroy pre-recorded servo information and make the cartridge unusable.

Cleaning the tape drive

HP StorageWorks Ultrium tape drives do not require regular cleaning. An Ultrium universal cleaning cartridge should only be used when the orange Clean LED is flashing.

You must use the Ultrium Universal Cleaning cartridge with HP StorageWorks Ultrium tape drives, as other cleaning cartridges will not load and run.

To clean the tape drive:

1. Insert the Ultrium Universal Cleaning cartridge.
2. The drive will carry out its cleaning cycle and eject the cartridge on completion (which can take up to 5 minutes). During the cleaning cycle the orange Clean LED will be on solidly and the green Ready LED will flash.

   Each HP Ultrium universal cleaning cartridge cleaning cartridge (C7978A) can be used up to 50 times with Ultrium tape drives. If the cleaning cartridge is ejected immediately with the Tape LED on, it has expired.

Handling cartridges

- Do not open the cartridge door and touch the tape media.
- Do not attempt to clean the tape path or tape guides inside the cartridge.
- Do not leave cartridges in the drive. The tape loses tension in the power-off state, which can lead to problems, particularly if the drive has been moved.
- Do not leave cartridges in excessively dry or humid conditions.
- Do not leave cartridges in direct sunlight or in places where magnetic fields are present (for example, under telephones, next to monitors or near transformers).
- Do not drop cartridges or handle them roughly.
- Stick labels onto the label area only.
- Do not bulk erase (or degauss) Ultrium format cartridges because this will render them unusable.

Operating and storage environment

To prevent condensation and for long life, the cartridge should only be operated or stored as follows:

- Operation: 10° C to 45° C (50° F to 113° F)
- Day-to-day storage (in plastic container): 16° C to 32° C (60° F to 90° F)
- Non-condensing relative humidity: 10% to 80% (operating), 20% to 60% (non-operating)
- Wet bulb temperature should not exceed 26° C (79° F)

Tapes intended for long-term storage should be stored in the plastic containers, at temperatures between 5° C and 23° C (41° F and 73° F) and 20% to 60% relative humidity.

8 Using HP OBDR

In this chapter:

- "Compatibility" on page 53
- "What does HP OBDR do?" on page 53
- "Remote disaster recovery (ProLiant servers only)" on page 54
- "Testing for compatibility" on page 54
- "Running HP OBDR" on page 54

Compatibility

HP One-Button Disaster Recovery is a standard feature on all HP StorageWorks Ultrium tape drives. However, it can only be used with specific configurations and will only recover the server to which the tape drive is directly connected.

To check whether your system (hardware, operating system and backup software) is OBDR-compatible, please refer to our World Wide Web site http://www.hp.com/go/connect.

For more specific information concerning the benefits of OBDR and the latest new features please refer to our World Wide Web site http://www.hp.com/go/obdr.

If your system does not support HP One-Button Disaster Recovery, you can still use your tape drive normally to back up and restore data. However, you must remember to create a separate set of emergency recovery disks for your operating system whenever you change your system configuration.

What does HP OBDR do?

Using just the tape drive and the most recent backup cartridge HP OBDR allows you to recover from the following types of system disaster:

- Hard disk failures, as long as the replacement hard disk is the same size or larger than the original and uses the same interface (for example, replace a SAS hard disk with another SAS disk)
- Hardware failures where the server is replaced by an **identical** component
- File corruption because of an operating system error
- File corruption because of an application software error
- Viruses that prevent you from booting your system correctly
- User errors that stop you from booting your system correctly

When you run HP One-Button Disaster Recovery, your tape drive goes through the following sequence:

1. It goes into a special disaster recovery mode that enables it to restore your operating system and reboot. It acts like a bootable CD-ROM. (Your system's ability to boot from CD-ROM is normally enabled by default. If you have changed this setting, you will need to enable it again. Refer to your system BIOS manual for further details.)
2. It returns to normal tape drive mode and restores the data.

Remote disaster recovery (ProLiant servers only)

The HP Remote Insight Lights-Out Edition (RILOE) on ProLiant servers gives the IT Administrator the ability to completely recover a failed server at a remote location without physically traveling to where the server resides. The on-site non-technical person need only insert the bootable cartridge into the tape drive when asked to do so by the administrator.

Refer to the HP OBDR web site at http://www.hp.com/go/obdr for more information about using this feature and compatibility.

Testing for compatibility

We recommend that you perform a full backup and test disaster recovery as soon as possible after installation—if possible, onto a blank hard disk. If you do not have a blank hard disk and do not want to overwrite your system, you can safely cancel the disaster recovery process at step 3 in the following procedure.

Refer to our connectivity web site (http://www.hp.com/go/connect) for more information about suitable backup applications.

Running HP OBDR

HP OBDR can only be used with backup applications that support one-button disaster recovery and methods of operating OBDR will vary between different software companies. Check our World Wide Web site (http://www.hp.com/go/obdr) for the latest information about software compatibility, firmware upgrades and troubleshooting before you use HP OBDR.

1. Insert the latest bootable cartridge in the tape drive. The cartridge must be written by a backup application that writes data to tape in CD-ROM format.

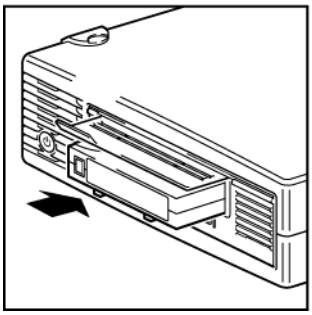

Figure 31 Inserting cartridge for OBDR

2. Hold down the Eject button on the tape drive and keep it pressed down while power cycling the tape drive. This activates the HP One-Button Disaster Recovery process. Release the button as soon as the Ready LED on the front panel flashes in the OBDR sequence. This is a repeated pattern of: flashing-steady on-flashing.

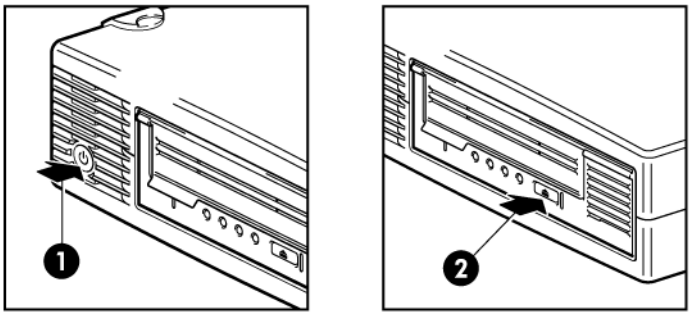

1. **external drives only:** switch on tape drive before server
2. **all drives:** hold down Eject button on tape drive and power on server

Figure 32 Powering on in OBDR mode

Keyboard shortcut for HP ProLiant servers There is no need to press the Eject button. Just power on your server and press the [F8] function key during the Power On Self Test (POST). This invokes OBDR to restore your system. For more information and specific instructions please refer to our World Wide Web site at http://www.hp.com/go/obdr.

3. Follow the on-screen instructions to set up the operating system. Normally, you can accept the default response to all the prompts, for example just press <Enter>.
4. The LEDs will flash in OBDR mode (flashing-steady on-flashing) while the tape drive restores your operating system to a state where it can run a normal data restore.
5. Once the operating system has been set up and rebooted, the Ready LED display on the tape drive changes to constant green and you can remove the backup cartridge, if you wish. You are now ready to run a normal data restore. Follow the normal process for your restore application.

If restore fails

If the restore fails for any reason, refer to our World Wide Web site (http://www.hp.com/go/obdr) and do a search on “OBDR” for detailed troubleshooting information.

9 Diagnostic Tools and Performance

In this chapter:

- "HP TapeAssure" on page 57
- "HP Library & Tape Tools" on page 57
- "Performance Assessment Tools" on page 58

HP TapeAssure

HP TapeAssure provides additional management tools for Windows users. It is a customized version of HP's powerful Command View for Tape Libraries software that is being made available free of charge with standalone tape drives. It provides valuable information about tape drive and media utilization, performance and health. If system health is not good, it also advises action to take.

HP strongly recommends installation of TapeAssure. Visit http://www.hp.com/go/tapeassure for a free download. There are two elements to the download:

- An installation and configuration package that manages the data collection from the tape drive to the server running Command View
- The Command View for standalone tape download itself

Detailed installation and operating instructions are provided with the downloads.

HP Library & Tape Tools

HP StorageWorks Library & Tape Tools is the recommended diagnostic and support tool for your HP tape storage product. It is available from a link on the CD shipped with your product or as a free download from the HP web site. It is supported on nearly all major operating systems.

HP recommends installation of Library & Tape Tools, so that it can be quickly accessed at any time. HP Support will also request that you use Library & Tape Tools should you need to contact them in the future, so it is a good idea to have it installed.

See http://www.hp.com/support/tapetools for compatibility information, updates and the latest version of the tool.

Troubleshooting with Library & Tape Tools

1. When Library & Tape Tools is first run, it will scan for HP tape drives and libraries on your system and ask you to select the one to work with. At this time you can see the HBA configuration of your server and how your devices are connected.

2. Once you have selected your device you have a number of choices for troubleshooting.
   - **Device identification:** shows part number, serial number and information about any cartridge loaded.
   - **Firmware upgrade:** allows you to locate and upgrade to the latest firmware. You will need to be connected to the internet for this.
   - **Run tests:** allows you to run proactive tests on your drive, such as the drive assessment test, which will verify the functionality of your drive in around 20 minutes. HP recommends running this test before calling HP Support. You will need to provide a 'trusted' cartridge that can be written to during this test.
   - **Generate a support ticket:** this is a full dump of the drive logs along with interpretation and is used by HP Support to learn about the condition of your drive. Most useful is the device analysis section which is the output from approximately 20 rules forming a comprehensive analysis of the health of your drive. These rules may give advice such as cleaning the head or trying a different tape if issues are found. The support ticket can be sent to HP Support for further analysis.
   - **Run the performance tests:** the tests to measure the write/read performance of your tape drive and the data generation rates of your disk subsystem are also integrated into Library & Tape Tools. Use these tests to find the performance bottleneck in your system.

Performance Assessment Tools

NOTE:

We strongly recommend that you check the information on our web site at http://www.hp.com/support/pat. This contains detailed support information that will enable you to identify bottlenecks and take full advantage of the performance capabilities of the Ultrium family of tape drives.

You can use our free, standalone performance assessment tools to check tape performance and test whether your disk subsystem can supply data at the maximum transfer rate.

The tools are located online at http://www.hp.com/support/pat. They are also integrated into HP Library & Tape Tools, which is available both online (http://www.hp.com/support/tapetools) and on the CD-ROM supplied with your tape drive.

Optimizing performance

Various factors can affect tape drive performance, particularly in a network environment. In nearly all cases when performance is not as expected, it is the data rates of the disk subsystem that cause the bottleneck.

If your tape drive is not performing as well as expected—for example, if backup windows are longer than expected—please try the tools and consider the following points before contacting HP Support at http://www.hp.com/support.

Can your system deliver the required performance?

- The Ultrium 3000 tape drive can write uncompressed data at up to 140 MB/Sec (504 GB/hour).
- The Ultrium 1760 tape drive can write uncompressed data at up to 80 MB/s (288 GB/hour).
- The Ultrium 920 tape drive can write uncompressed data at up to 60 MB/s (216 GB/hour).

- The Ultrium 448 tape drive can write uncompressed data at up to 24 MB/s (86 GB/hour).

To obtain this performance it is essential that your whole system can deliver this performance. In most cases, the backup application will provide details of the average time taken at the end of the backup.

Typical areas where bottlenecks can occur are:

- **Disk subsystem**

  A single spindle disk may not be able to deliver good data throughput at poor compression ratios. Best practice to ensure good throughput is to utilize multiple disk spindles or data sources.

- **System architecture**

  Be aware of the architecture of your data protection environment.

  The aggregation of multiple client sources over a network provides a good way of delivering good performance, but anything less than Gigabit Ethernet will limit performance for Ultrium tape drives.

  Some enterprise class backup applications can be made to interleave data from multiple sources, such as clients or disks, to keep the tape drive working at optimum performance.

- **Tape media type**

  The data cartridge should match the specification of the tape drive. A lower specification will have a lower transfer speed (see "Data cartridges" on page 47). Use:

  - Ultrium 3 TB R/W or Ultrium 3 TB WORM cartridges with Ultrium 3000 tape drives
  - Ultrium 1.6 TB R/W or Ultrium 1.6 TB WORM cartridges with Ultrium 1760 tape drives
  - Ultrium 800 GB R/W or Ultrium 800 GB WORM cartridges with Ultrium 920 tape drives
  - Ultrium 400 GB R/W cartridges with Ultrium 448 tape drives

- **Data and file types**

  The type of data being backed up or restored can affect performance. Typically, small files incur greater overhead in processing and access than large files. Equally, data that is not compressible will always limit the speed at which the drive can write/read data. You will achieve no more than native rates with uncompressible data.

  Examples of files that compress well are plain text files, spreadsheets; those that compress poorly are those that are either compressed as part of their format (such as, JPEG photographic files) or stored as compressed (such as, .ZIP files or .gz/.Z files on UNIX platforms).

10 Troubleshooting

In this chapter:

- "General Procedure" on page 61
- "Understanding LED sequences" on page 63
- "Problems with cartridges" on page 66

NOTE:

Many users can use HP Library & Tape Tools and TapeAssure to help them diagnose problems, see "Diagnostic Tools and Performance" on page 57. We also recommend the detailed troubleshooting guide at http://www.hp.com/go/support for comprehensive troubleshooting information.

General Procedure

If a problem occurs, the first step is to try to establish whether the problem lies with the cartridge, the drive, the host computer and connections, or the way the system is being operated.

Has the system just been installed?

There could be an installation problem:

1. Check through the information in the relevant installation chapter of this guide.
2. Has the system booted? If not, check that all hard disks are correctly seated in the hard disk bay and then check the cabling between the disks and the SAS controller.
3. Does an error appear during the boot sequence about a change to the RAID configuration? This error only appears if you have used the supplied cable to replace an existing SAS cable. Check the cabling between the disks and the SAS controller. If the problem persists, you have probably disconnected a hard disk drive bay that was in use. See "Option 3: Connect cable to port on host SAS controller and replace existing SAS cable" on page 31 for more information.
4. Has the system booted but the operating system has not seen the tape drive? Check that the drive has power, the READY light should be illuminated. If it is not, check that the power cord is connected correctly to the tape drive. If READY is illuminated, check the cabling between the tape drive and the SAS controller. Ensure that the HBA port to which the drive is connected is enabled. If an external drive was powered on after the server, power cycle the server.
5. Are appropriate Tape drivers as well as supported application software installed on the host?

6. Check the environmental conditions against the specified limits.

Table 4 Environmental specifications for Ultrium tape drives

	Temperature range	Non-condensing humidity range
Operating	50° to 95° F (10° to 40° C) at a minimum of 8 CFM airflow	20 to 80% RH (non-condensing)
Storage	-40° to 151° F (-40° to 66° C)	10 to 95% RH (non-condensing)

Are you using new cartridges or a different brand of cartridge? Have you been using the particular cartridge for a very long time?

The problem could lie with the cartridge:

1. Check through the media chapter on "Use the correct media" on page 47.
2. Check that you are using an Ultrium cartridge. Compatible media can be recognized by the Ultrium logo, which is the same as the logo on the front of your drive.
3. Use the correct media type:
   - Ultrium 3 TB R/W or Ultrium 3 TB WORM cartridges with Ultrium 3000 tape drives
   - Ultrium 1.6 TB R/W or Ultrium 1.6 TB WORM cartridges with Ultrium 1760 tape drives
   - Ultrium 800 GB R/W or Ultrium 800 GB WORM cartridges with Ultrium 920 tape drives
   - Ultrium 400 GB R/W cartridges with Ultrium 448 tape drives
4. Has the cartridge been write-protected, see "Write protecting cartridges" on page 51?
5. Clean the tape heads with the cleaning cartridge, see "Cleaning cartridges" on page 47. Make sure you are using the HP Ultrium Universal cleaning cartridge, C7978A.
6. If the Tape LED is flashing, the cartridge is probably faulty. Try using a different cartridge.
7. Try the operation again.
8. If the problem still occurs and you have not yet replaced the cartridge, try using a different cartridge.
9. If the problem is still there, the problem probably lies with the drive or the host computer.

Has the drive been moved recently? Have any cables been disconnected and reconnected? Has the environment changed—unusually hot, cold, damp or dry? Has there been dust or dirt near the drive. Have reasonable precautions against static been taken?

The problem could lie with the drive:

1. Check the cables and connectors.
2. Clean the tape heads with the cleaning cartridge.
3. If the problem persists, check the environmental conditions against the specified limits, see table above or refer to http://www.hp.com. Perhaps move the drive to a more suitable site.

Has a new operating system been installed in the host computer? Has new backup software been installed?

The problem could lie with the host or the software. Consult the computer's operating manuals, the software manual, or seek help from a service engineer.

Understanding LED sequences

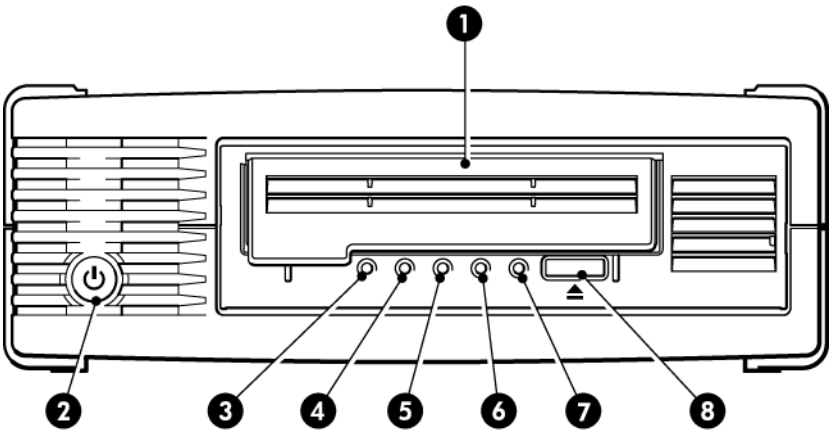

1. Cartridge door
2. On/Off switch (external drives only)
3. Encryption LED
4. Clean LED
5. Tape LED
6. Drive LED
7. Ready LED
8. Eject button

Figure 33 Front view of Ultrium 3000 external tape drive

The LED sequences in the following table relate to the Clean, Tape, Drive and Ready LEDs. The Ultrium 3280 tape drive also has an Encryption LED that describes encryption status. This is described separately in "Encryption LED" on page 65. The meaning of different patterns of LEDs, without encryption enabled, is as follows:

Table 5 Clean, Tape, Drive and Ready LED sequences

LED Sequence	Cause	Action required
All LEDs OFF.	Drive may not have power, may be faulty or may have been power cycled or reset during a firmware upgrade.	Make sure the drive is switched on. The power on/off switch on an external drive incorporates a green LED. Check the power cord connection and replace the cable if necessary. On external drives, you can use the power cord from your monitor or another device to check that the connection is working. If the power supply is present and all LEDs remain off, power cycle or reset the drive . If it still fails, call for service.
Ready and Clean OFF. Drive and Tape FLASH.	The drive has failed to execute power-on self test (POST).	Power cycle or reset the drive. If the error condition reappears, call for service.

LED Sequence	Cause	Action required
Ready is ON.	The drive is ready for operation.	None. This is normal.
Ready FLASHES.	The drive is carrying out a normal activity (read, write).	None. If the drive is upgrading firmware, do not reset or power cycle it.
Ready FLASHES- steady ON-FLASHES.	The drive is in OBDR mode.	See "Running HP OBDR" on page 54 for further details.
Ready FLASHES fast.	The drive is downloading firmware.	None. Do not reset or power cycle the drive.
Ready is OFF, others are ON.	Firmware is being reprogrammed.	None. Do not reset or power cycle the drive.
Clean FLASHES.	The drive requires cleaning.	Load the Ultrium cleaning cartridge. See "Cleaning cartridges" on page 47 for supported cartridges and instructions. If the Clean LED is still flashing when you load a new or known good data cartridge after cleaning, call for service.
Ready FLASHES and Clean is ON.	Cleaning is in progress.	None. The cleaning cartridge will eject on completion. The cleaning cycle can take up to 5 minutes to complete.
Tape FLASHES.	The drive believes the current tape or the tape just ejected is faulty.	Unload the tape cartridge. Make sure that you are using the correct format cartridge; an Ultrium data cartridge or Ultrium Universal Cleaning Cartridge. (See "Use the correct media" on page 47.) Reload the cartridge. If the Tape LED still flashes or starts flashing during the next backup, load a new or known good cartridge. If the Tape LED is now off, discard the 'suspect' tape cartridge. If it is still on, call for service.

LED Sequence	Cause	Action required
The tape is ejected immediately and Tape FLASHES, or Drive FLASHES on unloading tape.	The tape cartridge memory (CM) may be faulty.	Write protect the cartridge by sliding the switch on the tape cartridge, see "Write protecting cartridges" on page 51. The tape can be loaded and the data read. Once the data is recovered, the cartridge must be discarded.
Drive FLASHES.	The drive mechanism has detected an error.	Load a new cartridge. If the error persists, power cycle or reset the drive. If the Drive LED remains on, call for service.
Drive, Tape and Ready FLASH.	There is a firmware download problem.	Insert a cartridge to clear the LED sequence. If the condition persists, call for service.
Drive and Ready ON with Tape and Clean OFF. Alternates repeatedly.	The drive has a firmware error.	Power cycle or reset the drive. Upgrade the firmware. If the condition persists, call for service.

Encryption LED, Ultrium 3000 models only

The encryption LED may be blue or amber, as described in the following table. The state of the other LEDs depends upon the activity, as described below.

Table 6 Encryption LED, Ultrium 3000 tape drives

Encryption LED (Blue or Amber)	State
On	At power on
Off	The drive is idle and there is no encryption key.
Off with Ready flashing green	The tape drive is reading/writing unencrypted data from another host or unloading a cartridge.
On (solid blue)	The drive is idle but the encryption key is loaded. The drive is ready to read/write encrypted data.
On (solid blue) with Ready flashing green	The drive is reading/writing encrypted data.
Alternate flashing, blue and amber	There is an encryption related error. This is cleared after unload executes or successful encryption/decryption resumes. See also "Encryption troubleshooting" on page 69.

NOTE:

The Encryption LED only functions if you are using backup software that supports hardware encryption and this feature is enabled in the backup application. See http://www.hp.com/go/connect for backup application compatibility.

Problems with cartridges

If you experience any problems using HP branded cartridges, check:

- The cartridge case is intact and that it contains no splits, cracks or damage.
- The cartridge has been stored at the correct temperature and humidity. This prevents condensation. See the insert included with the tape cartridge for storage conditions.
- The write-protect switch is fully operational. It should move from side to side with a positive click.
- The World Wide Web site for more detailed troubleshooting information: http://www.hp.com/support.

The cartridge is jammed

If the cartridge is jammed or the backup application is unable to eject it, you can force eject the cartridge. Once the cartridge is successfully ejected, it is good practice to run Library & Tape Tools to diagnose the problem and to upgrade the firmware. If the failure occurs regularly, contact customer service at http://www.hp.com/support.

1. Attempt a drive unload/eject operation from the backup software.

   Many backup applications will issue a **Prevent Media Removal** (PMR) command to the drive robot in an attempt to prevent human interference during a backup job. If this occurs, the software that issued the PMR must be used to load and unload tapes.

2. Shut down backup software and, if in a Windows environment, stop removable storage services.
3. Press the Eject button on the front of the tape drive.

   Sometimes it is necessary to use the Eject button instead of software to unload a tape because software can lose communication with the product or a rogue application can prevent the software from unloading the tape.

IMPORTANT:

This can take several minutes in many cases. Ensure that drive activity has stopped before continuing on (waiting 10 minutes is a good rule of thumb). It is important that you allow sufficient time for the drive to complete rewinding the cartridge. If you interrupt it, you may damage the media or the tape drive.

4. Run the HP StorageWorks Library and Tape Tools (L&TT) **Stuck Tape** test.

   Run L&TT (http://www.hp.com/support/tapetools) on a host connected to the product, select the drive, select the tests and run the **Stuck Tape** test.

   - This test can overcome many non-physical causes of a stuck tape.
   - Follow the instructions in L&TT. It may take several minutes and may not appear to be doing anything. Allow the test to complete on its own.
   - Check the results when the test is complete for additional information and suggestions.

NOTE:

While L&TT is running it is good practice to obtain a Support Ticket to capture all the logs in case they are needed by HP Support.

IMPORTANT:

If the cartridge could be ejected prior to this step, there is no problem with the drive or media. If it could not be ejected using the steps above, there may be a problem with the cartridge or drive.

5. Power down the drive.
6. Disconnect the data cable.
7. After at least 15 seconds, power the drive back up and wait till the drive is idle/ready.

CAUTION:

Use care when disconnecting data cables to ensure that connectors are not reversed, pins are not bent, and so on.

IMPORTANT:

Powering up with a cartridge in the drive can take several minutes. It is important that you allow sufficient time for the drive to complete rewinding the cartridge. If you interrupt it, you may damage the media or the tape drive.

8. Ensure that drive activity has stopped (waiting 10 minutes after power up is a good rule of thumb). Push the Eject button.

   This step attempts to overcome unload issues due to the drive being in an abnormal state or because **Prevent Media Removal** has been incorrectly left on after being set by a rogue application.

9. Initiate a force eject or emergency unload operation by pressing and holding the Eject button for 15 seconds. This step causes the drive to try everything possible to unload the tape.

CAUTION:

You may lose data if you force eject a cartridge that is in the middle of a backup. The tape may also become unreadable because an EOD (End of Data) mark may not be properly written.

10. If the cartridge is still jammed, the tape drive has failed. Contact customer support at http://www.hp.com/support.

Once the cartridge is successfully ejected, it is good practice to run Library & Tape Tools to diagnose the problem and upgrade the firmware. If the failure occurs regularly on multiple cartridges, contact customer support at http://www.hp.com/support.

The drive will not accept the cartridge (or ejects it immediately)

The cartridge may have been damaged, for example dropped, or the drive may have a fault. If it is a cleaning cartridge, it has probably expired and should be discarded immediately. For data cartridges:

1. Check that the drive has power (the power cord is properly connected and the Ready LED is on).
2. Check that you are using the correct media. Use only Ultrium media.

Table 7 Data cartridge compatibility

Tape drive model	Ultrium 200 GB* data cartridge	Ultrium 400 GB* data cartridge	Ultrium 800 GB* data cartridge	Ultrium 1.6 TB* data cartridge	Ultrium 3 TB* data cartridge
Ultrium 3000	not supported	not supported	read only	read/write and write once/read many	**read/write (C7975A) and write once/read many (C7975W)**
Ultrium 1760	not supported	read only	read/write and write once/read many	**read/write (C7974A) and write once/read many (C7974W)**	not supported
Ultrium 920	read only	read/write	**read/write (C7973A) and write once/read many (C7973W)**	not supported	not supported
Ultrium 448	read/write	**read/write (C7972A)**	not supported	not supported	not supported
	* Capacity assumes 2:1 compression.				

NOTE:

The 100 GB* data cartridge, C7970A, is also supported on Ultrium 448 tape drives. It is **not** supported on Ultrium 920 and Ultrium 1760 tape drives.

3. Make sure that you have loaded the cartridge with the correct orientation (see "Inserting a cartridge" on page 45).
4. Check for damage to your media and discard it, if it is damaged.

5. Use a new or known, good piece of media and see if it loads. If it does, the original cartridge is faulty and should be discarded.
6. Check if another Ultrium drive of the same model will accept the cartridge. If it does, the original drive may be faulty. Before calling customer service, please check that the tape drive is responding. See "Troubleshooting with Library & Tape Tools" on page 57.

Encryption troubleshooting

- Ensure that you are using an Ultrium 3000 or Ultrium 1760 tape drive and Ultrium 3 TB or 1.6 TB media, repectively.
- Ensure that your software supports hardware encryption. It may be necessary to update the software. Consult http://www.hp.com/go/connect or your software vendor for more information.
- Ensure that the correct key or pass phrase has been entered.
- Ensure that your HBA supports the encryption commands. It may be necessary to update the firmware. Consult http://www.hp.com/go/connect for more information.

11 Replacing a tape drive

If your tape drive proves to be faulty and cannot be repaired and it is still covered by the original warranty, it will be replaced. HP will provide a replacement tape drive free of charge. Based on availability and where geography permits, the replacement tape drive will be shipped for next business day delivery. Same day or four-hour delivery may be offered at an additional charge where geography permits. If you request HP to install the replacement tape drive, you will be charged for the travel and labor costs of this service.

See the complete HP limited warranty statement at: http://h18006.www1.hp.com/products/storageworks/warranty.html

To disconnect your drive

1. Unpack your replacement drive, and retain the packaging.
2. Power off the server and disconnect from the mains power supply.
3. **Internal drives only:** Remove the cover from the server. Observing normal anti-static precautions remove any screws that are holding the tape drive in place.
4. Disconnect the drive's power and SAS cables. Slide internal drives carefully out of the mounting bay.
5. Put the drive into the packaging that contained the replacement drive.
6. Return the faulty drive to your local HP Service Center. Instructions on where to return faulty drives will be shipped with the replacement drive. You must ship the defective drive back to HP within a defined period of time, normally five (5) business days. The defective part must be returned with the associated documentation in the provided shipping material. Failure to return the defective part may result in HP billing you for the replacement. HP will pay all shipping and part return costs and determine the courier/carrier to be used.

NOTE:

If you are not replacing an internal tape drive immediately, you should insert a blanking plate into the empty bay. Replace the cover on the server and secure with screws, as appropriate.

To reconnect your tape drive

Follow the step-by-step instructions in this User Guide.

Index

A

audience, 9

B

backup software
  drivers, 17
  encryption, 18
  supported, 18
backup software problems, 62
buttons
  Unload, 46

C

cables, 14
cabling options
  connect external drive to external SAS port, 37, 38
  connect to new HBA, 26
  connect to spare SAS port on host HBA, 28
  external drives to external SAS port, 37
  internal drive, 19, 24
  replace cable to SAS port ,
cartridges
  data,
  cleaning, 47, 52
  encryption, 49
  handling, 52
  inserting, 45
  jammed, 66
  loading, 45
  not accepted, 68
  operating and storage environment, 52
  power off, 46
  problems, 62
  removing, 46
  write once, read many, 48
  write protecting, 51
CD-ROM
  using, 16
cleaning cartridges, 47, 52
compatibility
  backup software, 18
connect external drive to external SAS port, 37
connect external drive to new HBA
  external SAS port, 38
connect to existing HBA
  recable SAS port, 31
  spare SAS port, 28
connect to new HBA, 26
connecting SAS cables
  internal drive, 19, 24
connectivity, 14
  operating systems, 14
conventions
  document, 9
  text symbols, 10

D

data cartridges, 47
diagnostic tools
  TapeAssure,
  L&TT, 57
  performance assessment, 58
disaster recovery
  See OBDR
document
  conventions, 9
  related documentation, 9
documentation
  HP website, 9
  providing feedback, 11
drive
  operating, 43, 45
drivers
  backup software, 17
  IA64, 17
  installing, 17
  UNIX, 17
  windows, 17

E

encryption, 49
  backup software, 18
encryption LED, 65
external drive
  cabling to external SAS port, 37, 38

F

front panel
  drives, 43, 45
front view, 13, 43

H

handling cartridges, 52
help
  obtaining, 10
host
  problems, 62
HP
  technical support, 10
HP OBDR
  See OBDR

I

IA64
  drivers, 17
inserting cartridges, 45
installation
  problems, 61
  verifying, 41
installing
  drivers, 17
  internal drive, 19
installing external
  reboot server, 39
installing internal
  attach mounting hardware, 22
  install drive, 23
  prepare mounting bay, 21
  reboot server, 36
  secure drive, 35
internal drive
  cabling to new HBA, 26
  cabling to spare SAS port, 28
  installing, 19
  mounting requirements, 20
  replace cabling to SAS port, 31

J

jammed cartridge, 66

L

L&TT, 57
LEDs, 63
  at power on, 41
  encryption, 65
loading cartridges, 45

M

media
  See cartridges
models supported, 13
mounting requirements, 20
mounting screws
  warranty ,

O

OBDR, 53
  compatibility, 53
  how to run, 54
  remote disaster recovery, 54
  testing for compatibility, 54
  what it does, 53
One-Button Disaster Recovery
  See OBDR
operating systems, 14
operation
  drives, 43, 45

P

performance assessment tools, 58
power off, 46
power on button, 43
power specifications, 14

R

registration, 11
related documentation, 9
replacing tape drive, 71

S

SCSI
  guidelines, 14
Subscriber's Choice, HP, 11
supported models, 13
symbols in text, 10

T

tape drive
  replacing, 71
TapeAssure, 57
technical support
  HP, 10
  service locator website, 11
text symbols, 10

troubleshooting
cartridge ejected, 68
jammed cartridge, 66
L&TT, 57
LEDs, 63

U

Ultrium tape drive
front view, 13, 43
LEDs, 63
loading, 45
models supported, 13
powering off, 46
UNIX
drivers, 17
Unload button, 46

V

verify installation, 41

W

warranty, 10
mounting screws, 22
websites
HP ,
HP Subscriber's Choice for Business, 11
product manuals, 9
Windows
drivers, 17
WORM cartridges, 48
write protect, 51